AS

SINGLE-POINT LOAD CELL for platforms 200x200 mm

LAUMAS®

Manufactured according to OIML R60 standards

Capacity from 0.25 kg to 1 kg

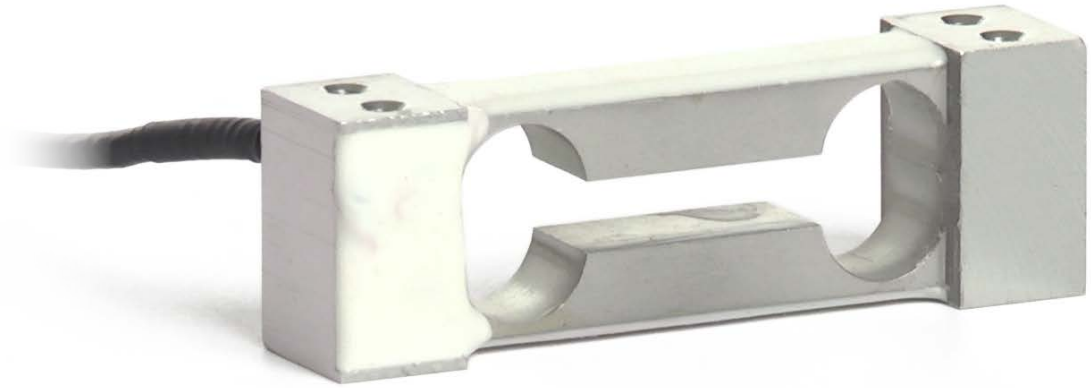

- ALUMINUM ALLOY
- COMBINED ERROR ≤ ±0.03%
- IP65 PROTECTION RATING

CAPACITY kg	PLATFORM (mm)	NET WEIGHT (kg)
0.25	200 x 200	0.1
0.5	200 x 200	0.1
1	200 x 200	0.1

CERTIFICATIONS

EAC	Complies with the Eurasian Customs Union regulations
UK CA	Equivalent of the CE marking for the United Kingdom
	CERTIFICATIONS ON REQUEST
	Calibration report
Ex	ATEX *(zone 2-22)*
EAC Ex	Complies with the Eurasian Customs Union regulations for use in potentially explosive atmospheres
Ex NEPSI	Complies with Chinese market regulations for use in potentially explosive atmospheres

Rev. 0.0

AS

SINGLE-POINT LOAD CELL for platforms 200x200 mm

LAUMAS®

DIMENSIONS (mm)

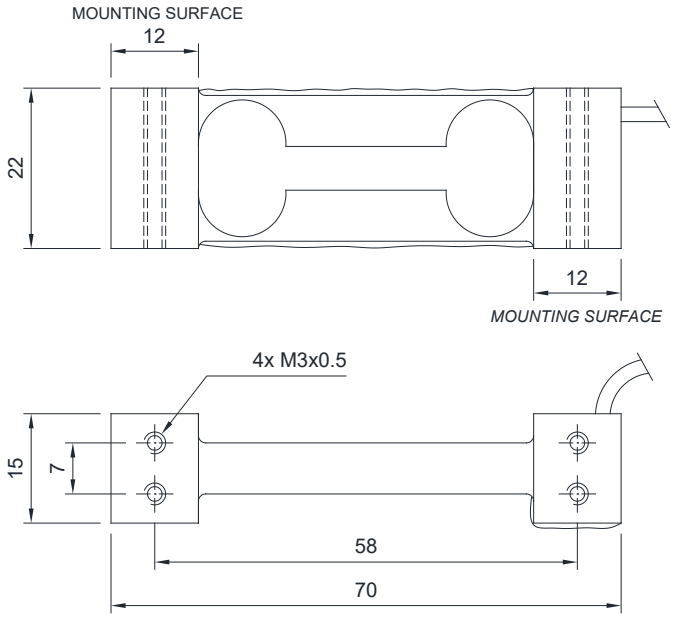

For the load cell fixing screws, provide the tightening torque indicated in the table

Screw	M3	
Screw class	6.8	8.8
Tightening torque	1 Nm	1.3 Nm

TECHNICAL FEATURES

Material	Aluminum alloy
Nominal load (E max)	0.25 - 0.50 - 1.00 kg
Combined error	≤ ±0.03%
Protection rating	IP65

Rated output	1 mV/V ±20%	Input resistance	410 Ω ±10
Temperature effect on zero	0.0025% °C	Output resistance	350 Ω ±3
Temperature effect on span	0.0025% °C	Zero balance	±2%
Compensated temperature range	-10 °C / +40 °C	Insulation resistance	>2000 MΩ
Operating temperature range	-20 °C / +60 °C	Safe overload (% of full scale)	200%
Creep at nominal load in 30 minutes	0.03%	Ultimate overload (% of full scale)	400%
Max supply voltage without damage	15 V	Deflection at nominal load	0.3 mm

ELECTRICAL CONNECTIONS

Cable length	3 m
Cable diameter	2.5 mm
Cores	4 x 0.20 mm²

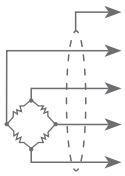

SHIELD	
+ SIGNAL	GREEN
+ EXCITATION	RED
- SIGNAL	WHITE
- EXCITATION	BLACK

Rev. 0.0

The Company reserves the right to make changes to the technical data, drawings and images without notice.

LAUMAS S.r.l.
Fax: (+39) 0521 681091
• SALES DEPARTMENT: sales@laumas.it
• Phone: (+39) 0521 683124

ISO 9001
ISO 14001

www.laumas.com