Kjaerulf Pedersen a/s

Sheet no. 1-40

RESISTANCE THERMOMETER type: RT-RM3

Process attachment: none or adjustable coupling
Execution: mineral insulated materials, i.e. bendable sensor tubes

Application:

- For measuring temperatures in situations that require the sensor: to be robust, flexible/ bendable (**Note!** min bending radius 5 x D with repeated bending/ 2 x D with bending once), to have a quick reaction time
- Typically applied in: processing plants, the engineering industry, drying plants

Properties:

- Pt100 resistance thermometer in accordance with IEC 60751
- Measuring insert: fixed
- Mechanical and thermal stress in accordance with DIN 43772
- Production in accordance with DIN 43733
- Process attachment: coupling, soldering or other mechanical means of attachment
- Outer protective sheath: different materials
- Ambient temperatures min/max: -25/ +120°C (depending on cable insulation)

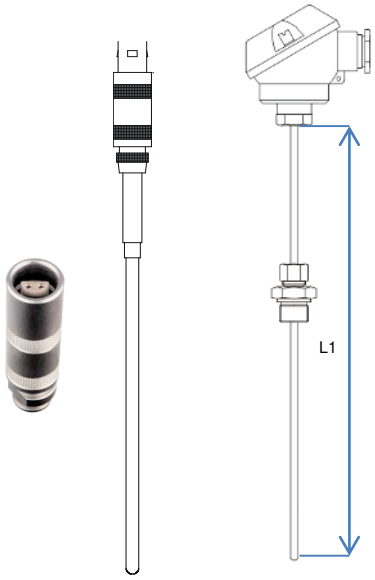

	RT-RM3	5652-E191015

MECHANICAL SPECIFICATIONS:

Protective sheath: ----------
Wnr.1.4571 (AISI316TI)
Special

Type: ----------
LEMO plug
B-Head
BM-Head (Mini)
Special

Sensor diameter: ----------
Ø3 mm
Ø4.5 mm
Ø6 mm
Special

Nominal length: ----------
150 mm
300 mm
500 mm
1000 mm
Special

Process attachment: ----------
None
Adjustable nipple 1/4" BSP
Adjustable nipple 3/8" BSP
Special

ELECTRICAL SPECIFICATIONS:

---**Sensor element:**
1xPt100
2xPt100
1xPt1000
2xPt1000

---**Number of conductors:**
2 wire
3 wire (only for 1xPt)
4 wire (only for 1xPt)

---**Media temperatures max:**
+400°C
+600°C
Special

---**Tolerance in acc. with IEC 60751:**
Type A DIN(i.e.±(0,15+0,002xTactual)°C)
Type B 1/1 DIN (i.e.±(0,3+0,005xTactual)°C)
Type B 1/3 DIN(i.e.±(0,1+0,0017xTactual)°C)
Type B 1/6 DIN(i.e.±(0,05+0,00083xTactual)°C)
Type B 1/10 DIN(i.e.±(0,03+0,0005xTactual)°C)

Date:	Quantity:	Price per piece:	KP item No.:	Customer item No.:
Company name:	Name:	Tel.:	Fax:/e-mail:	

Kjaerulf Pedersen a/s, Taastrupgaardsvej 8-10, DK-2630 Taastrup, Tel.: +45 39760203, Fax: +45 39760501, sensor@kp-as.com, www.kp-as.com