RESISTANCE THERMOMETER **Measuring insert: Interchangeable**	**Type: RT-BC-P**	Sheet No. 2-3 V2.1 **5452-E010321V3.1**

Application:

- For measuring temperatures in the food, Pharmaceutical, cosmetic and chemical/ technical industries

Properties:

- Sensor: Pt100 and Pt1000 in acc. with IEC 60751
- Measuring insert: Interchangeable
- Mechanical and thermal stress in acc. with DIN 43772
- Parts with media contact in EN 1.4404 (AISI 316L)
- Withstands media temperatures of up to max 250°C
- Withstands vibrations
- Quick reaction time
- Degree of protection is determined by the electrical connection; in this case IP65
- After the sensor has been fitted, the plug can be adjusted to point in the desired direction

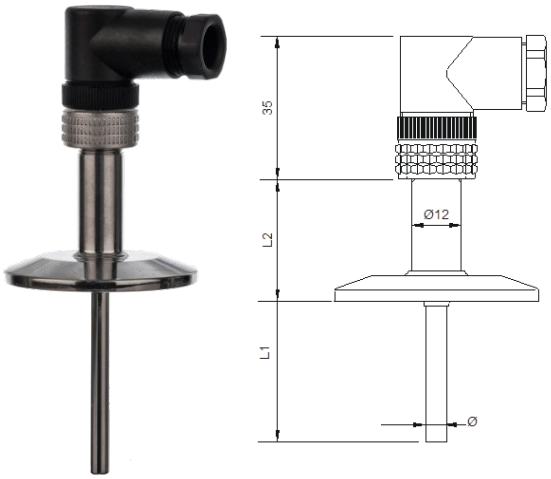

MECHANICAL SPECIFICATIONS

Protective sheath: ----------
EN 1.4404 (AISI 316L) max. 850°C

Immersion Tube Diameter Ø: ----------
Ø5 mm / Ø6 mm / Ø8 mm / Ø12 mm
Special

Extension length L2: ----------
30 mm
50 mm
Special

Immersion Tube length L1: ----------
20 mm
35 mm
50 mm
Special

Process attachment: ----------
3/4" APC
11/2" DN38, ISO2852
2" DN 51, ISO2852
Special

Surface area of parts with media contact: --
Mechanically polished <0,8 µm
Electro-polished <0,5 µm

ELECTRICAL SPECIFICATIONS

---Cable (pre-mounted in Plug):
SS (Silicone-Silicone) max. 180°C
SBS (Silicone-Inner Braided-Silicone)
TBT (Teflon-Inner Braided-Teflon)
None

---Cable length [m]:

---Sensor element:
1xPt100
2xPt100
1xPt1000 (only cl. B 1/1 and cl. A)
2xPt1000 (only cl. B 1/1 and cl. A)

---Number of conductors:
2-wire (recommended only for Pt1000)
3-wire
4-wire

---Media temperature max:
+180°C
+250°C

---Tolerance in acc. with IEC 60751:
Type A DIN (i.e.±(0,15+0,002xTactual) °C)
Type B 1/1 DIN (i.e.±(0,3+0,005xTactual) °C)
Type B 1/3 DIN (i.e.±(0,1+0,0017xTactual) °C)
Type B 1/6 DIN (i.e.±(0,05+0,00083xTactual) °C)
Type B 1/10 DIN (i.e.±(0,03+0,0005xTactual) °C)

Link for further information: Pt100 Tolerance

Date:

Part No.

Kjaerulf Pedersen a/s, Taastrupgaardsvej 8-10, DK-2630 Taastrup, Tel.: +45 39760203, Fax: +45 39760501, sensor@kp-as.com, www.kp-as.com

This is provided to you as a service and for information purpose only. While we have attempted to maintain the information as accurately as possible, the page may contain errors or omissions for which we disclaim any and all liability.

RESISTANCE THERMOMETER **Measuring insert: Interchangeable**	**Type: RT-BC-P**	Sheet No. 2-3 V2.1 **5452- E010321V3.1**

Calibration:
Temperature calibration are used to verify and certify the sensor to have the correct accuracy. We can do either: “In house” or “Accredited” calibration. Accredited is certified by 3.e part. Normally we do a calibration in 3 points.

Enhanced performance services:
Cold applications (below -50°C) will influence the material and the measurement. CRYO treatment is needed to ensure a correct and working sensor down to -196°C.

A sensor will always drift over time, especially when there are high temperature fluctuations.
With “Ageing treatment” we stabilize the sensor to ensure a minimum drift over time. The benefits are long term stability, more correct measurement and easier planning of calibration periods.

Documentation:
Please order the correct documentation when ordering the sensor.

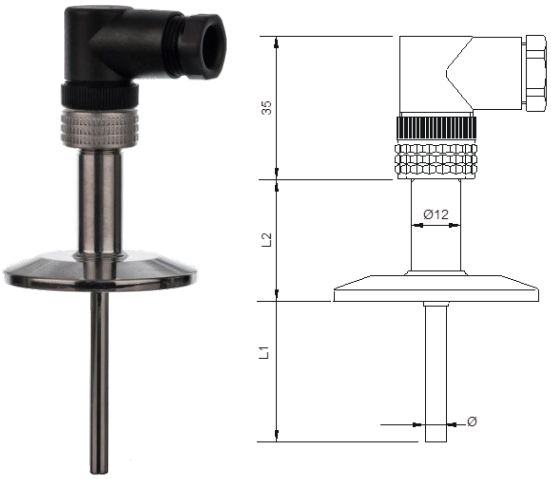

SIGNAL PROCESSING

Enclosure

Marine Box (112x82x42mm) ----------

ABS Box (82x80x56mm) ----------

NONE ----------



Programmable mounted transmitter:

Measuring range min/max: -200/+850°C
Output: 2-wire, 4-20 mA
Min. span: 25°C
Ambient temperaturer min/max: -40/+85°C

5333A Uninsulated for RTD
5333D EEX Uninsulated for RTD
5332A Uninsulated for RTD
5332D EEX Uninsulated for RTD
5331A Galvanic Isolated RTD / TC
5331D EEX Galvanic Isolated RTD / TC
5335A Hart 5 Protocol Standard
5335D Hart 5 Protocol CSA, FM, ATEX, IECEx
5337A Hart 5 & 7 Protocol
5337D Hart 5 & 7 Protocol CSA, FM, ATEX, IECEx



Transmitter Type:			
4 mA =	C°	20 mA =	C°

Link to further information:

Transmitter Overview

Programmable rail mounted transmitter

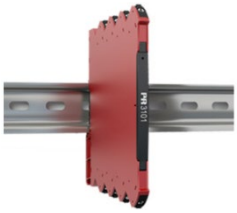

CALIBRATION

None ---**Calibration:**
In house (Span -33°C - +700°C)

Accredited – in laboratory (-196°C - +1200°C)

1.	Point	°C
2.	Point	°C
3.	Point	°C

More point on request

Enhanced performance services

---**Cryo treatment.**
For temperature sensor under -50°C

---**Ageing:**
For long term stability.
Secure minimum drift of sensor accuracy

---**Documentation**
Certificate: 3.1 Material
Certificate of origin
Certificate of conformity

Other on request

Date:

Part No.

Kjaerulf Pedersen a/s, Taastrupgaardsvej 8-10, DK-2630 Taastrup, Tel.: +45 39760203, Fax: +45 39760501, sensor@kp-as.com, www.kp-as.com

This is provided to you as a service and for information purpose only. While we have attempted to maintain the information as accurately as possible, the page may contain errors or omissions for which we disclaim any and all liability.