RESISTANCE THERMOMETER **Measuring insert: Fixed**	**Type: RT-BUI-C**	5451-E170325V3.2

Application:

- For measuring temperatures in the food industry and the pharmaceutical, cosmetic and chemical/ technical industries

Properties:

- Resistance thermometer Pt100 and Pt1000 in acc. with IEC 60751
- Mechanical and thermal stress in acc. with DIN 43772
- Measuring insert: Fixed
- Parts with media contact in EN 14404 (AISI 316L)
- Withstands media temperatures of up to max 250°C
- Withstands vibrations
- Quick reaction time
- Degree of protection is determined by electrical connection; in this case protection head
- Can be delivered with head mounted transmitter

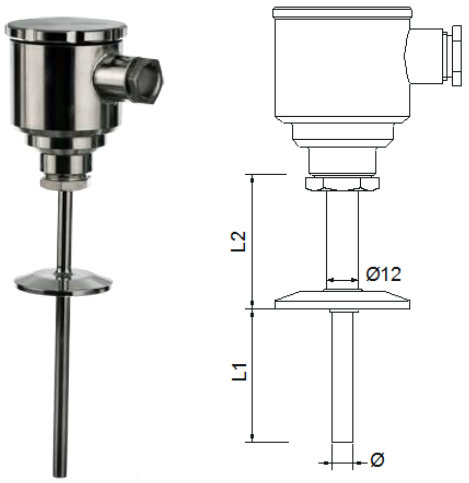

MECHANICAL SPECIFICATIONS

Protective sheath: ----------
EN 1.4404 (AISI 316Ti) max. 850°C

Sensor diameter Ø [mm]: ----------
Ø5 / Ø6 / Ø8 / Ø12
Other on request

Extension length L2 [mm]: ----------
30 / 50
Other on request

Immersion length L1 [mm]: ----------
20 / 35 / 50
Other on request

Process attachment: ----------
3/4" APC
11/2" DN38, ISO2852
2" DN51, ISO2852

Surface area of parts with media contact: --
Mechanically polished <0,8 µm
Electro-polished <0,5 µm

Protection head: ----------
***B** (aluminium (Al), enamelled, low cap, IP62)*
BH (Al, enamelled, high cap, IP62)
BSB (Al, tilting lid w/screw, low cap, IP65)
BSBH (Al, tilting lid w/screw, high cap, IP65)
BSBH-W (Al, tilting lid, high cap, digital display (excl. tr.), IP65)
CE (Al, enamelled, screw cap, IP68)
BSP (plastic, black, screw cap, IP54)
BRF (stainless steel, screw cap, M20x1,5, IP67)
BRF-EEX (stainless steel, screw cap, M20x1,5, IP67)
B-SRF (sanitary, stainless steel, screw cap, M20x1,5, IP67)
Other on request

Cable gland (pre-mounted): ----------
None (standard – cable entry M20x1.5)
Plastic
Nickle platted brass
Stainless acid-proof steel

Please specify cable diameter: ----------

ELECTRICAL SPECIFICATIONS

---Plug (pre-mounted In Head):
M12 (for M20)
Harting (specify type)
Other on request
None

---Cable (pre-mounted in Head):
SS (Silicone-Silicone) max. 180°C
SBS (Silicone-Inner Braided-Silicone) max. 180°C
TBT (Teflon-Inner Braided-Teflon) max. 250°C
None

---Cable length [m]:

---Sensor element:
1xPt100
2xPt100
1xPt1000 (only cl. B 1/1 and cl. A)
2xPt1000 (only cl. B 1/1 and cl. A)

---Number of conductors:
2-wire (recommended only for Pt1000)
3-wire
4-wire

---Media temperature max:
+180°C
+250°C

---Tolerance in acc. with IEC 60751:
Type A DIN (i.e.±(0,15+0,002xTactual) °C)
Type B 1/1 DIN (i.e.±(0,3+0,005xTactual) °C)
Type B 1/3 DIN (i.e.±(0,1+0,0017xTactual) °C)
Type B 1/6 DIN (i.e.±(0,05+0,00083xTactual) °C)
Type B 1/10 DIN (i.e.±(0,03+0,0005xTactual) °C)

Link for further information: Pt100 Tolerance

Date:

Part No.:

Kjaerulf Pedersen a/s, Taastrupgaardsvej 8-10, DK-2630 Taastrup, Tel.: +45 39760203, sales@kp-as.com, www.kp-as.com

This is provided to you as a service and for information purpose only. While we have attempted to maintain the information as accurately as possible, the page may contain errors or omissions for which we disclaim any and all liability.

RESISTANCE THERMOMETER **Measuring insert: Interchangeable**	**Type: RT-BUI-C**	5451-E170325V3.2

Calibration:
Temperature calibration are used to verify and certify the sensor to have the correct accuracy. We can do either: “In house” or “Accredited” calibration. Accredited is certified by 3.e part. Normally we do a calibration in 3 points.

Enhanced performance services:
Cold applications (below -50°C) will influence the material and the measurement. CRYO treatment is needed to ensure a correct and working sensor down to -196°C.

A sensor will always drift over time, especially when there are high temperature fluctuations.
With “Ageing treatment” we stabilize the sensor to ensure a minimum drift over time. The benefits are long term stability, more correct measurement and easier planning of calibration periods.

Documentation:
Please order the correct documentation when ordering the sensor.

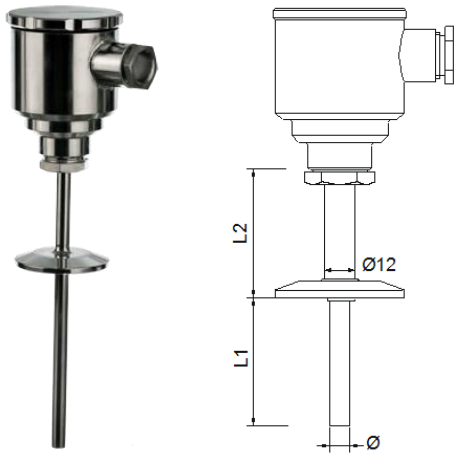

SIGNAL PROCESSING

Ceramic socket mounted in terminal head. ---------- ○

Prepared for transmitter w/o ceramic socket. ------- w/long leads ●

Programmable head mounted transmitter---------- ○

Measuring range min/max: -200/+850°C
Output: 2-wire, 4-20 mA
Min. span: 25°C
Ambient temperature min/max: -40/+85°C

5333A Uninsulated for RTD
5333D EEX Uninsulated for RTD
5332A Uninsulated for RTD
5332D EEX Uninsulated for RTD
5331A Galvanic Isolated RTD / TC
5331D EEX Galvanic Isolated RTD / TC
5335A Hart 5 Protocol Standard
5335D Hart 5 Protocol CSA, FM, ATEX, IECEx
5337A Hart 5 & 7 Protocol
5337D Hart 5 & 7 Protocol CSA, FM, ATEX, IECEx



Transmitter Type:			
4 mA =		C°	20 mA =	C°

CALIBRATION

None ----**Calibration:**
In house (Span -33°C - +700°C)

Accredited – in laboratory (-196°C - +1200°C)

1.	Point	°C
2.	Point	°C
3.	Point	°C

More point on request

Enhanced performance services

☐ ----**Cryo treatment.**
For temperature sensor under -50°C

☐ ----**Ageing:**
For long term stability.
Secure minimum drift of sensor accuracy

☐ ----**Documentation**
Certificate: 3.1 Material
Certificate of origin
Certificate of conformity

Other on request

Link to further information:

Transmitter Overview

Programmable rail mounted transmitter

Date:
Part No.:

Kjaerulf Pedersen a/s, Taastrupgaardsvej 8-10, DK-2630 Taastrup, Tel.: +45 39760203, sales@kp-as.com, www.kp-as.com

This is provided to you as a service and for information purpose only. While we have attempted to maintain the information as accurately as possible, the page may contain errors or omissions for which we disclaim any and all liability.