Cleantype Xtra Touch

PRODUCT PROPERTIES

- PC keyboard made of high-quality ABS plastic
- Precise key function due to scissor mechanism
- Key lock for deactivate the keyboard during cleaning
- Cursor control by integrated touchpad
- Flat key profile
- Excellent typing feeling
- 4 LED Status indicator
- Fold-out stands for tilting the keyboard for ergonomic working

SPECIFICATION

GENERAL:	
Number of keys:	83
Housing type:	Desktop housing
Switch technology:	Silicone plunger, contact foil and
	scissor mechanism
Switch travel:	2,5 (+/-0,2) mm
Switch force:	0,6 (+/-0,08) N
Keyswitch life:	ca. 5 mill. (per key)
Material / colour:	Plastic / black, white
Interface:	USB
Connector:	USB Type A
Cable length:	180 cm

Weight:	610 g +/-10 g
Operating temperature:	0 °C to +40 °C
Storage temperature:	-40 °C to +55°C
Dimensions:	364,4 x 133,4 x 25 mm
Warranty:	2 years
Certifications:	CE, FCC
	EMC (Medical) EN60601-1-2: 2015+A1: 2021
	EMC (Industry) EN61000-6-2 & -6-4
TOUCHPAD:	
Active area:	62 x 46 mm

ORDER INFORMATION

Art. No.	Full product name	Colour	Layout	Status
KL30207	TKL-083-GCQ-TOUCH-WHITE-USB-DE	white	German	FP
KL30208	TKL-083-GCQ-TOUCH-WHITE-USB-US/EU	white	US/EU	request
KL30201	TKL-083-GCQ-TOUCH-BLACK-USB-DE	black	German	FP
KL31233	TKL-083-GCQ-TOUCH-BLACK-USB-FR	black	French	request
KL31205	TKL-083-GCQ-TOUCH-BLACK-USB-UK	black	UK	request
KL30202	TKL-083-GCQ-TOUCH-BLACK-USB-US/EU	black	US/EU	request
Other layouts, configurations and interfaces on request.				

Changes and errors reserved!

GETT Gerätetechnik GmbH
Mittlerer Ring 1 | 08233 Treuen | Germany
Tel: +49 37468 660-0
Fax: +49 37468 660-066
E-Mail: info@gett.de
Internet: www.gett.de

Gett North America LLC
E-Mail: info@gett-na.com
Internet: www.gett-na.com

Gett Asia Ltd.
E-Mail: info@gett-asia.com
Internet: www.gett-asia.com

TECHNICAL DRAWING

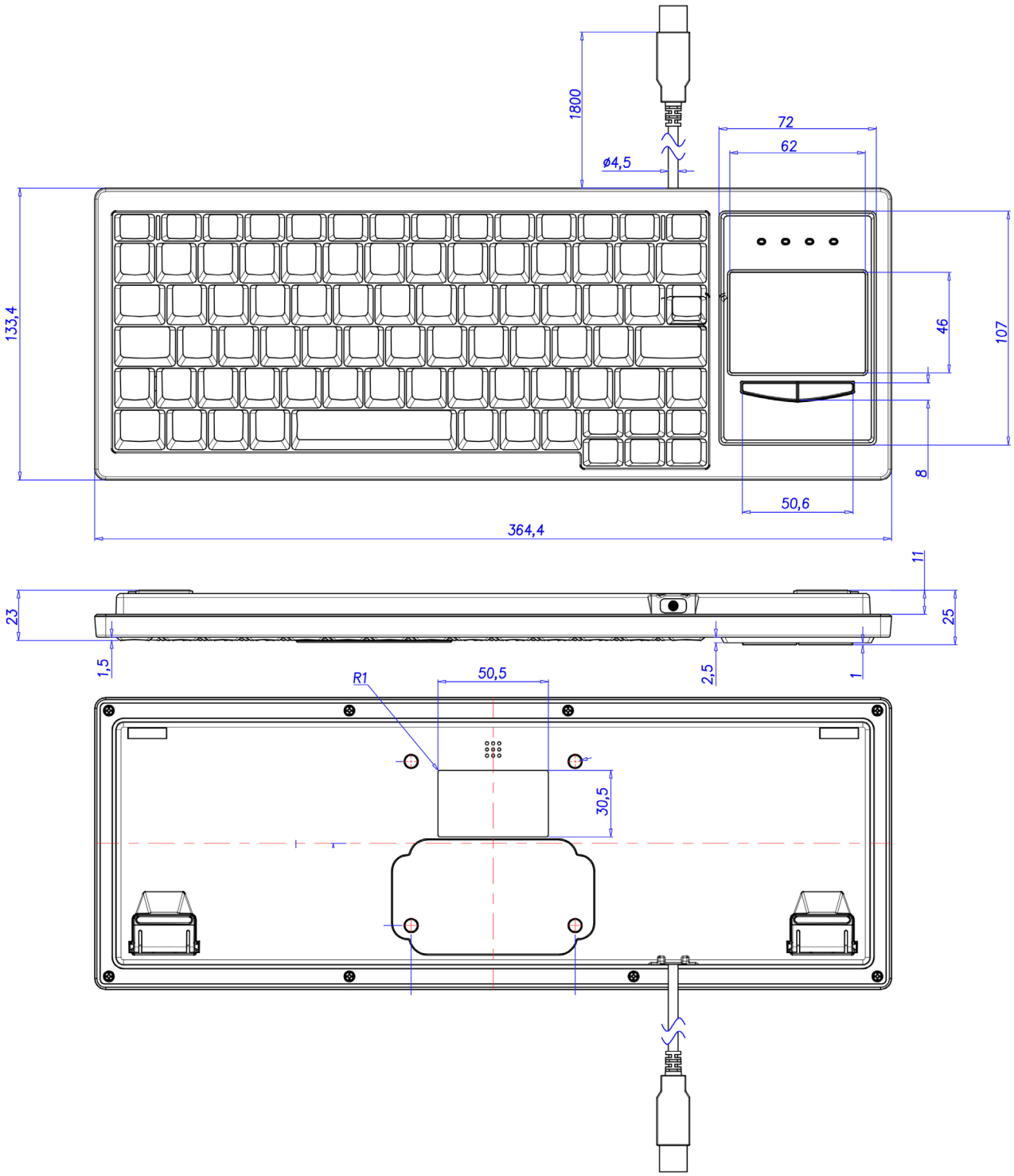

GETT Gerätetechnik GmbH
Mittlerer Ring 1 | 08233 Treuen | Germany
Tel: +49 37468 660-0
Fax: +49 37468 660-066
E-Mail: info@gett.de
Internet: www.gett.de

Gett North America LLC
E-Mail: info@gett-na.com
Internet: www.gett-na.com

Gett Asia Ltd.
E-Mail: info@gett-asia.com
Internet: www.gett-asia.com

SPECIAL ATTENTION TO OPERATION AND FUNCTION

1. Fn - Layer

The keyboards of the Xtra series have an Fn layer.
This is used to call up the following functions / function groups:

1. 1. KeyLock

- In order to be able to switch off the keys for cleaning the keyboard without having to disconnect the keyboard from the PC, the keyboards of the Xtra series have a key lock.
- The key lock is activated and deactivated by pressing the key combination [Fn] + [F5].
- As long as the key lock is activated, this is indicated by the first three LEDs flashing.

Num Lock	Caps Lock	Scroll Lock	Power
✸	✸	✸	○

1. 2. Keys from the navigation key area

[Print] = [Fn] + [F8]
[Scroll Lock] = [Fn] + [F12]

The activated Scroll Lock status is indicated by the Scroll Lock LED.

Num Lock	Caps Lock	Scroll Lock	Power
○	○	●	○

[Insert] = [Fn] + [F10]
[Delete] = [Fn] + [F9]
[Home] = [Fn] + [←]
[End] = [Fn] + [→]
[Page ↑] = [Fn] + [↑]
[Page ↓] = [Fn] + [↓]

1. 3. Numeric pad

- The keyboards of the Xtra series have a compact keyboard layout with 83 keys.
- Similar to a notebook, this layout includes a numeric pad located in the alpha keypad, which can be accessed via the Fn layer.
- Switching between the alpha keypad and the numeric pad is done with the key combination [Fn] + [F11] .
- The activated numeric pad is indicated by the Num Lock LED.

Num Lock	Caps Lock	Scroll Lock	Power
●	○	○	○

Changes and errors reserved!

GETT Gerätetechnik GmbH
Mittlerer Ring 1 | 08233 Treuen | Germany
Tel: +49 37468 660-0
Fax: +49 37468 660-066
E-Mail: info@gett.de
Internet: www.gett.de

Gett North America LLC
E-Mail: info@gett-na.com
Internet: www.gett-na.com

Gett Asia Ltd.
E-Mail: info@gett-asia.com
Internet: www.gett-asia.com