Valve connector, housing style CI, 2+PE bridged, M12, male, straight, 5 poles, z-diode, sensor-/actuator cable

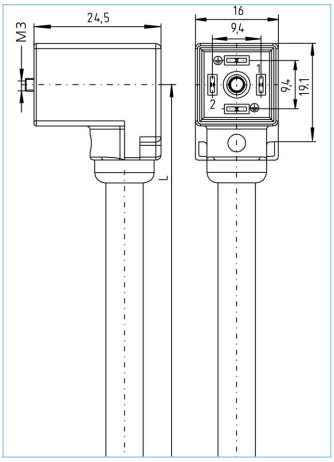

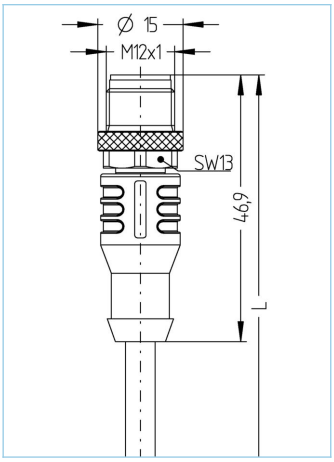

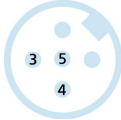

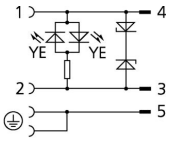

Product data	
Item description	VCI22-24.4-5-AL-WAS5.002/S370
Item-No.	8050192
Length	5m
Customs tariff-No.	85444290
Step-File	VCI22-24.4-L-AL-WAS5.stp
EAN	4047106009953

Technical data	A-side	B-side
Connector	female, angled, Valve CI	male, straight, M12
Number of pins	2+PE, PE bridged	2+PE
Pin assignment	1 BN, 2 BU, PE: GNYE	3 BU, 4 BN, 5 GNYE
Coding of		A
Rated voltage	30V$_{AC/DC}$	60V
Current load (at 40°C)	4A	4A
Insulation resistance	≥10^8Ω	≥10^8Ω
Ambient temperature product	-30°C...+90°C	-30°C...+90°C
Contact material	Metal, CuZn, silver-plated	Metal, CuZn, gold-plated
Contact-carrier material	Plastic, PA, BK	Plastic, TPU, BK
Grip body material	Plastic, TPU, BK, translucent	Plastic, TPU, BK
Coupling nut material		Metal, CuZn, nickel-plated
Sealing (female) material	Plastic, TPU	
Signal status-indicator	LED YE	
Protection circuit	Z-diode	
Fixing screw	Metal, CuZn, nickel-plated	
Housing style	CI	
Standards	DIN EN 175301-803	IEC 61076-2-101
Degree of protection (mounted)	IP65, IP67, IP68	IP65, IP67, IP68
Mechanical life-cycle	>100 mating cycles	>100 mating cycles
Degree of pollution	3	3

The information contained in this data sheet was compiled with the utmost care. The liability for the correctness, completeness and timelines is limited to gross negligence.

Cable web	PUR, UL, S370

Flexible, silicone- and halogen-free control line with high mechanical strength. The cable is chemicals, hydrolysis-, and microbes- resistant. The drag-chain application is possible at a bending radius of minimum 10 x d. Due to its weld-field immunity, the cable is very well suited for the flexible application in robotics, machine-tool, and metal-cutting production. The cables meet the UL and CSA (UL10493/20549; cULus) requirements.

Outer diameter of jacket	5.20 mm
Cable-jacket material	PUR
Jacket color	BK, similar RAL9005
Wire cross-section	5 x 0.34 mm²
Wire insulation material	PP
Wire colors	BN, WH, BU, BK, GNYE
Wire structure	42 x 0.10 mm
Bending radius (fixed)	5 x Ø-cable
Bending radius (repeated)	10 x Ø-cable
Temperature range (repeated)	-30°C...+90°C
Temperature range (fixed)	-40°C...+90°C
Temperature range (drag chain)	-25°C…+60°C
Drag chain-application	3 Mio. cycles
Halogen-free	Yes
Torsion	+/-180°/m, < 1 Mio. cycles
Rated voltage cable	≤300 V
Special features	flame retardant, halogen free, hydrolysis proof, LABS free, oil resistant, ozone resistant, recyclable, RoHs compliant, acid- and alkali resistant, drag chain-adapted, welding sparks resistant, seawater resistant, silicone free, torsion resistant, UV resistant

Classification	
eCl@ss 6.0	27279218
eCl@ss 7.0	27279218
eCl@ss 8.0	27279218
eCl@ss 9.0	27060312
ETIM 5.0	EC001855
ETIM 6.0	EC001855

Accessories

Labels, Valve connector
https://www.escha.net/en/products/standard/accessories-for-connectivity/8047109

Link to product

https://www.escha.net/en/products/standard/valve-connectors/8050192

The information contained in this data sheet was compiled with the utmost care. The liability for the correctness, completeness and timelines is limited to gross negligence.