T-splitter, M12, female, straight, 4 poles, M12, female, straight, 4 poles, M12, male, straight, 4 poles

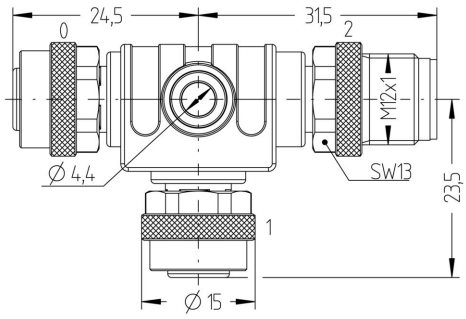

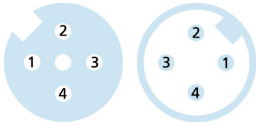

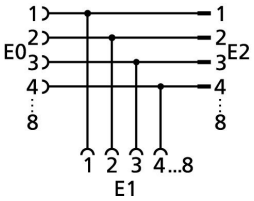

Product data	
Item description	FKM4-FKM4-FSM4
Item-No.	8009675
Customs tariff-No.	85366990
Step-File	FKM4-FKM4-FSM4.stp
EAN	4047106086206

Technical data	Exit 0	Exit 1	Exit 2
Connector	female, M12	female, M12	male, M12
Contact material	Metal, CuZn, gold-plated	Metal, CuZn, gold-plated	Metal, CuZn, gold-plated
Contact-carrier material	Plastic, TPU, BK	Plastic, TPU, BK	Plastic, TPU, BK
Coupling nut material	Metal, CuZn, nickel-plated	Metal, CuZn, nickel-plated	Metal, CuZn, nickel-plated
Rated voltage	250V	250V	250V
Coding of	A	A	A
Number of pins	4	4	4
Current load (at 40°C)	4A	4A	4A

Insulation resistance	≥10^8Ω
Ambient temperature product	-30°C...+90°C
Grip body material	Plastic, TPU, BK
Sealing (female) material	FPM/FKM
Mechanical life-cycle	>100 mating cycles
Standards	IEC 61076-2-101
Degree of protection (mounted)	IP65, IP67, IP68
Degree of pollution	3

Classification	
eCl@ss 6.0	27279201
eCl@ss 7.0	27279201
eCl@ss 8.0	27279201
eCl@ss 9.0	27440106
ETIM 5.0	EC002062
ETIM 6.0	EC002925

Link to product

https://www.escha.net/en/products/standard/t-splitters-y-splitters/8009675