Receptacle, M12, female, straight, 4 poles, D-coded, back wall-mounting, wire contact, stainless steel, Industrial Ethernet

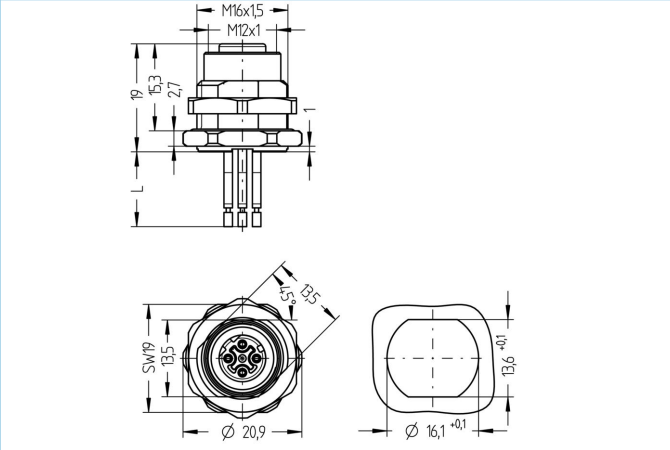

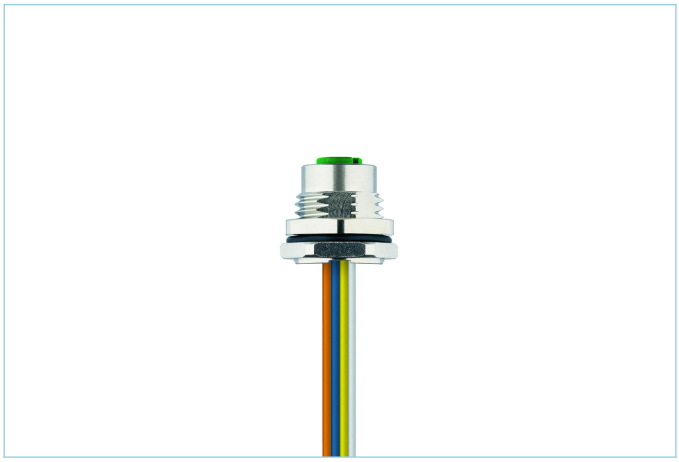

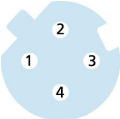

Product data	
Item description	IE-FHM12EKUD4.029-0,5/M16
Item-No.	8082723
Customs tariff-No.	85444290
Packaging unit	5
Step-File	IE-FHM12KUD4-m_M16.stp
EAN	4047106240769

Technical data	
Connector	female, straight, M12
Number of pins	4
Pin assignment	1 YE, 2 WH, 3 OG, 4 BU
Coding	D
Rated voltage	250V
Current load per pin (at 40°C)	4A
Insulation resistance	≥10^8Ω
Ambient temperature product	-40°C...+90°C
Contact material	Metal, CuZn, gold-plated
Contact-carrier material	Plastic, PA GF, GN
Receptacle housing material	Stainless steel 1.4404
Sealing (female) material	FPM/FKM
Mounting direction	Back wall-mounting (incl. Fixing screw)
Wrench size of fastening nut	A/F19
Wire length	0.50m
Wire colors	YE/OG ; WH/BU
Wire cross-section	4 x 0.34 mm²
Wire insulation material	PVC
Fastening thread	M16x1.5

The information contained in this data sheet was compiled with the utmost care. The liability for the correctness, completeness and timelines is limited to gross negligence.

Connecting type	Wire contact
Degree of protection (mounted)	IP65, IP67, IP68
Mechanical life-cycle	>100 mating cycles
Degree of pollution	3
Style	straight
Classification	
eCl@ss 6.0	27279220
eCl@ss 7.0	27440103
eCl@ss 8.0	27440103
eCl@ss 9.0	27440103
ETIM 5.0	EC002061
ETIM 6.0	EC002061

The information contained in this data sheet was compiled with the utmost care. The liability for the correctness, completeness and timelines is limited to gross negligence.