Receptacle, M12, male, straight, 4 poles, back wall-mounting, print contact, shielded

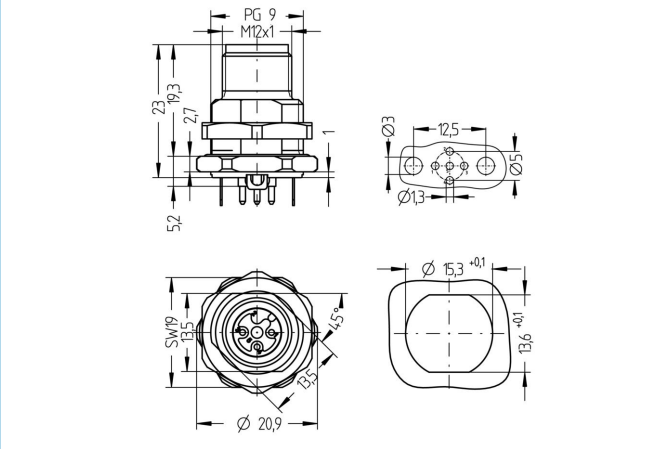

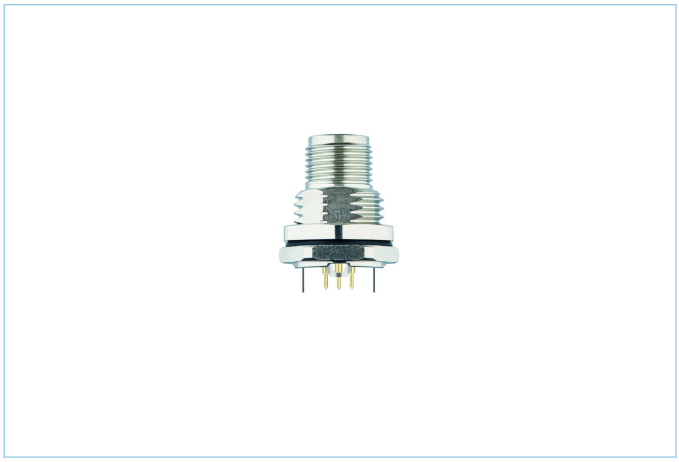

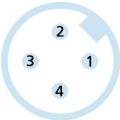

Product data	
Item description	AL-FHM12SSA4-P/PG9
Item-No.	8072389
Customs tariff-No.	85366990
Packaging unit	10
Step-File	AL-FHM12SSA4-P_Pg9.stp
EAN	4047106169077

Technical data	
Connector	male, straight, M12
Number of pins	4
Coding	A
Rated voltage	250V
Current load per pin (at 40°C)	4A
Insulation resistance	≥10^8Ω
Ambient temperature product	-30°C...+90°C
Reflow	2 min. 250 °C
Contact material	Metal, CuZn, gold-plated
Contact-carrier material	Plastic, PA GF, BK
Receptacle housing material	Metal, CuZn, nickel-plated
Material of external sealing	NBR
Shielding	with shielding
Mounting direction	Back wall-mounting (incl. Fixing screw)
Wrench size of fastening nut	A/F18
Fastening thread	PG9
Connecting type	Print contact
Standards	IEC 61076-2-101
Degree of protection (mounted)	IP65, IP67, IP68
Mechanical life-cycle	>100 mating cycles
Degree of pollution	3
Style	straight

The information contained in this data sheet was compiled with the utmost care. The liability for the correctness, completeness and timelines is limited to gross negligence.

Classification	
eCl@ss 6.0	27279220
eCl@ss 7.0	27440103
eCl@ss 8.0	27440103
eCl@ss 9.0	27440103
ETIM 5.0	EC002061
ETIM 6.0	EC002061

Link to product

https://www.escha.net/en/products/standard/receptacles/8072389