Receptacle, M12, female, straight, 4 poles, T-coded, back wall-mounting, print contact, POWER

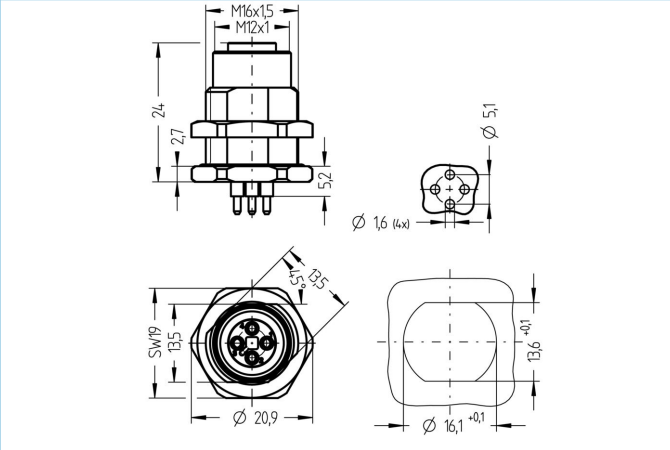

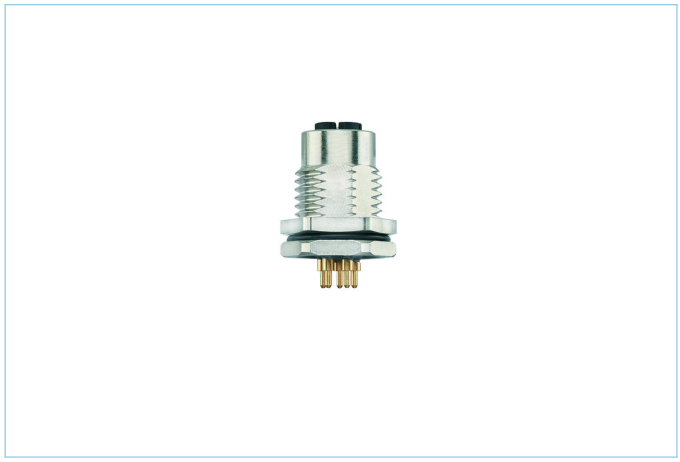

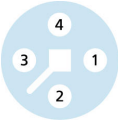

Product data	
Item description	PT-FHM12KU4-P/M16
Item-No.	8086192
Customs tariff-No.	85444290
Packaging unit	10
Step-File	PT-FHM12KU4-P_M16.stp
EAN	4047106256999

Technical data	
Connector	female, straight, M12
Number of pins	4
Coding	T
Rated voltage	63V_{DC}
Current load per pin (at 40°C)	12A
Resistance	≤ 3mΩ
Ambient temperature product	-30°C...+90°C
Contact material	Metal, CuZn, gold-plated
Contact-carrier material	Plastic, PA, BK
Receptacle housing material	Metal, CuZn, nickel-plated
Sealing (female) material	FPM/FKM
Mounting direction	Back wall-mounting (incl. Fixing screw)
Fastening thread	M16x1.5
Connecting type	Print contact
Standards	IEC 61076-2-111
Degree of protection (mounted)	IP65, IP67, IP68
Mechanical life-cycle	>100 mating cycles
Degree of pollution	3
Style	straight

The information contained in this data sheet was compiled with the utmost care. The liability for the correctness, completeness and timelines is limited to gross negligence.

Classification	
eCl@ss 6.0	27279220
eCl@ss 7.0	27440103
eCl@ss 8.0	27440103
eCl@ss 9.0	27440103
ETIM 5.0	EC002061
ETIM 6.0	EC002061

Link to product

https://www.escha.net/en/products/standard/power-connectors/8086192