M8, male, straight, 4 poles, M8, male, straight, 4 poles, shielded, rail approved

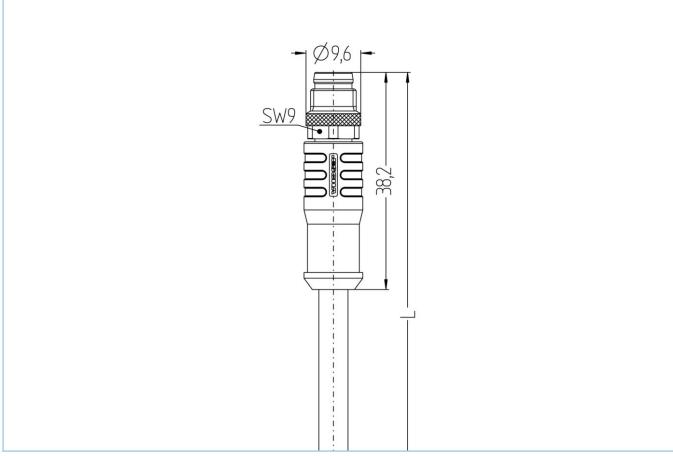

Product data	
Item description	RA-SSPS4.065-0,5-RA-SSPS4.065/S4500
Item-No.	8105667
Length	0.5m
Customs tariff-No.	85444290
Step-File	RA-SSPS4-m-RA-SSPS4.stp
EAN	4047106296094

Technical data	A-side	B-side
Connector	male, straight, M8	male, straight, M8
Number of pins	4	4
Pin assignment	1 WH 1, 2 WH 2, 3 WH 3, 4 WH 4	1 WH 1, 2 WH 2, 3 WH 3, 4 WH 4
Rated voltage	60V	60V
Current load (at 40°C)	4A	4A
Insulation resistance	≥10^8Ω	≥10^8Ω
Resistance	≤ 5mΩ	≤ 5mΩ
Contact material	Metal, CuZn, gold-plated	Metal, CuZn, gold-plated
Contact-carrier material	Plastic, PA, BK	Plastic, PA, BK
Grip body material	Plastic, TPU, BK	Plastic, TPU, BK
Coupling nut material	Metal, CuZn, nickel-plated	Metal, CuZn, nickel-plated
Shielding	with shielding	with shielding
Standards	IEC 61076-2-104	IEC 61076-2-104
Mechanical life-cycle	>100 mating cycles	>100 mating cycles
Degree of pollution	3	3

Advanced technical data rail approved	
Standards	DIN EN 50155, DIN EN 45545-2
Shock & vibration	Class 1, Category B (DIN EN 61373)
Degree of protection (mounted)	IP67 (-30°C...+90°C), IP65 (-40°C...+90°C)
Temperature range	Tx (-40°C...+90°C)

The information contained in this data sheet was compiled with the utmost care. The liability for the correctness, completeness and timelines is limited to gross negligence.

Cable web	RADOX®, 4x0,5mm², S4500

Halogen-free, electron-beam cross-linked cable with improved behaviour in case of fire, easy to strip, soldering resistant and flexible. The cable is intended for fixed, mechanically protected installation inside railway vehicles or for installation in applications where limited alternating bending stresses occur during operation. The cable fullfills the requirements according to EN 50306-4 and EN 45545-2 (HL1 - HL3). It is characterized by a wide temperature range and a high oil- and fuel resistance. RADOX® is a registered trademark of HUBER+SUHNER AG, Switzerland.

Outer diameter of jacket	5.4 mm
Cable-jacket material	RADOX® EM 104
Jacket color	BK, similar RAL9005
Wire cross-section	4 x 0.5 mm²
Wire insulation material	RADOX® EI 306
Wire colors	WH 1, WH 2, WH 3, WH 4
Wire structure	19 x 0,18 mm
Bending radius (fixed)	3xØ-cable
Bending radius (repeated)	4xØ-cable
Temperature range (fixed)	-50°C...+120°C
Fire prevention according to	DIN EN 45545-2 HL1-3, DIN 5510 fire prevention-levels 1-4, NF F16-101 category A1, A2, B, NFPA 130, UN ECE R 118
Shielding	Yes
Halogen-free	Yes
Special features	increased thermal load, flame retardant, low emission of smoke, halogen free, oil- and fuel resistant, RoHs compliant

Classification	
eCl@ss 6.0	27279218
eCl@ss 7.0	27279218
eCl@ss 8.0	27279218
eCl@ss 9.0	27060311
ETIM 5.0	EC001855
ETIM 6.0	EC001855

Accessories

Torque-wrench set
https://www.escha.net/en/products/standard/accessories-for-connectivity/8055431

Marking rings Ø 9mm
https://www.escha.net/en/products/standard/accessories-for-connectivity?p=1&o=3&n=15&f=809

Screw cap, M8
https://www.escha.net/en/products/standard/accessories-for-connectivity/8081761

Mounting-clip, M8
https://www.escha.net/en/products/standard/accessories-for-connectivity/8047658

Mounting-set, M8
https://www.escha.net/en/products/standard/accessories-for-connectivity/8047663

The information contained in this data sheet was compiled with the utmost care. The liability for the correctness, completeness and timelines is limited to gross negligence.