M12, male, angled, 4 poles, D-coded, shielded, rail approved

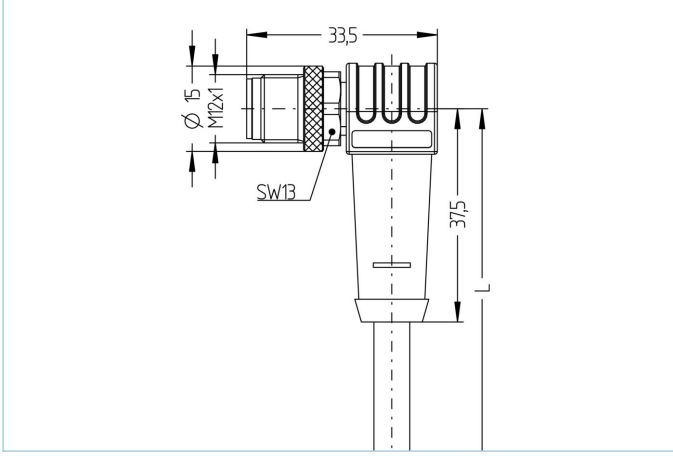

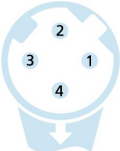

Product data	
Item description	RA-WWASSY4.029-5/S4002
Item-No.	8063072
Length	5m
Customs tariff-No.	85444290
Step-File	RA-WWASSY4.stp
EAN	4047106158804

Technical data	
Connector	male, angled, M12
Number of pins	4
Pin assignment	1 YE, 2 WH, 3 OG, 4 BU
Coding	D
Rated voltage	250V
Current load per pin (at 40°C)	4A
Insulation resistance	$\geq 10^8 \Omega$
Resistance	≤ 5mΩ
Transmission features	Cat5e
Contact material	Metal, CuZn, gold-plated
Contact-carrier material	Plastic, PA, BK
Grip body material	Plastic, TPU, BK
Coupling nut material	Metal, CuZn, nickel-plated
Shielding	with shielding
Standards	IEC 61076-2-101
Mechanical life-cycle	>100 mating cycles
Cable end assembly	open cable end
Degree of pollution	3
Style	angled

The information contained in this data sheet was compiled with the utmost care. The liability for the correctness, completeness and timelines is limited to gross negligence.

Advanced technical data rail approved	
Standards	DIN EN 50155, DIN EN 45545-2
Shock & vibration	Class 1, Category B (DIN EN 61373)
Degree of protection (mounted)	IP67 (-30°C...+90°C), IP65 (-40°C...+90°C)
Temperature range	Tx (-40°C...+90°C)
Fire prevention according to	DIN EN 45545-2 HL1-3

Cable web	Cat5, RADOX®, RW, 1x4xAWG22, S4002

Halogen-free, electron-beam cross-linked Cat5-cable with improved fire performance. This cable can be used for fixed and protected installation inside of rail vehicles and busses and fullfills the requirements according to EN 45545-2 (HL1 - HL3). It is optimally suited for all Ethernet applications of class D (ECN) according to IEEE 802.3. For installation the guidelines of EN 50355 and EN 50343 must be considered. Due to its thin diameter, this cable is predestined for applications in which overmolded RJ45-connectors are used. RADOX® is a registered trademark of HUBER+SUHNER AG, Switzerland. RADOX® is a registered trademark of HUBER+SUHNER AG, Switzerland.

Outer diameter of jacket	6.60 mm
Cable-jacket material	RADOX® EM 104
Jacket color	BK
Wire cross-section	1 x 4 x AWG22, star quad
Wire insulation material	RADOX® FOAM
Wire colors	WH, BU, OG, YE
Bending radius (fixed)	6xØ cable
Temperature range (fixed)	-50°C...+90°C
Fire prevention according to	DIN EN 45545-2 HL1-3, DIN 5510 fire prevention-levels 1-4, NF F16-101 category A1, A2, B, UNI CEI 11170, danger level LR1-LR4, NFPA 130, UN ECE R 118
Shielding	Yes
Halogen-free	Yes
Transmission features	Cat5e
Special features	increased thermal load, flame retardant, low emission of smoke, halogen free, oil- and fuel resistant, RoHs compliant

Classification	
eCl@ss 6.0	27060307
eCl@ss 7.0	27060307
eCl@ss 8.0	27060307
eCl@ss 9.0	27060307
ETIM 5.0	EC000830
ETIM 6.0	EC000830

Accessories

Torque-wrench set
https://www.escha.net/en/products/standard/accessories-for-connectivity/8055431

Cable Stripping Tool
https://www.escha.net/en/products/standard/accessories-for-connectivity/8066215

Mounting-clip, M12
https://www.escha.net/en/products/standard/accessories-for-connectivity/8047660

Safety-clip, M12

Screw cap, M12
https://www.escha.net/en/products/standard/accessories-for-connectivity?p=1&o=3&n=15&f=811

Marking rings Ø 9mm
https://www.escha.net/en/products/standard/accessories-for-connectivity?p=1&o=3&n=15&f=809

Mounting-set, M12
https://www.escha.net/en/products/standard/accessories-for-connectivity/8047664

Link to product

https://www.escha.net/en/products/standard/connectors-for-bus-and-rail/8063072

The information contained in this data sheet was compiled with the utmost care. The liability for the correctness, completeness and timelines is limited to gross negligence.