M12, male, straight, 4 poles, T-coded, POWER

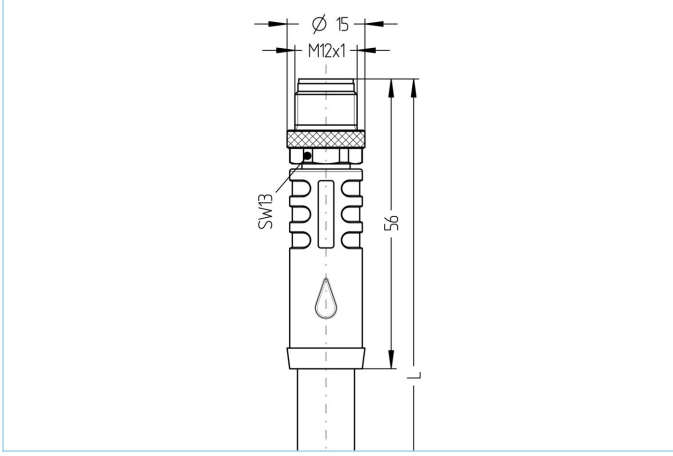

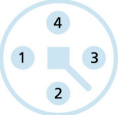

Product data	
Item description	PT-AM12S4-2/S5015
Item-No.	8063992
Length	2m
Customs tariff-No.	85444290
Step-File	PT-AM12S4-L.stp
EAN	4047106152390

Technical data	
Connector	male, straight, M12
Number of pins	4
Pin assignment	1 BN, 2 WH, 3 BU, 4 BK
Coding	T
Rated voltage	63V_{DC}
Current load per pin (at 40°C)	12A
Insulation resistance	≥10^8Ω
Ambient temperature product	-30°C...+90°C
Contact material	Metal, CuZn, gold-plated
Contact-carrier material	Plastic, PA, BK
Grip body material	Plastic, TPU, BK
Coupling nut material	Metal, CuZn, nickel-plated
Standards	IEC 61076-2-111
Degree of protection (mounted)	IP65, IP67, IP68
Mechanical life-cycle	>100 mating cycles
Cable end assembly	open cable end
Degree of pollution	3
Style	straight

The information contained in this data sheet was compiled with the utmost care. The liability for the correctness, completeness and timelines is limited to gross negligence.

Cable web	PUR, UL, S5015, 1,5mm²

High flexible and oil-resistant, halogen-free control cables for fixed-wired dynamic drag-chain applications with average loads. The PUR outer jacket is firm and resistant to high mechanical stresses like grinding or abrasion. They are adapted for applications in automation, load circuits of industrial machinery, automatic assembly- and placement machinery, especially in wet areas of machine tools and transfer lines. The cables meet the UL and CSA requirements.

Outer diameter of jacket	9.60 mm
Cable-jacket material	PUR
Jacket color	BK, similar RAL9005
Wire cross-section	4 x 1.5 mm²
Wire insulation material	PP
Wire colors	BN, WH, BU, BK
Wire structure	extra finely stranded class 6
Bending radius (fixed)	4 x Ø-cable
Bending radius (repeated)	7,5 x Ø-cable
Temperature range (repeated)	-30°C...+90°C
Temperature range (fixed)	-40°C...+90°C
Temperature range (drag chain)	-25°C…+60°C
Temperature range (UL repeated)	-30°C...+80°C
Temperature range (UL fixed)	-40°C...+80°C
Drag chain-application	>8 Mio. cycles
Halogen-free	Yes
Torsion	+/-270°/m, ≥ 1 Mio. cycles
Rated voltage cable	VDE U0/U: 600V/1000V
Special features	flame retardant, halogen free, high flexibility, LABS free, microbes resistant, oil resistant, ozone resistant, recyclable, RoHs compliant, acid- and alkali resistant, drag chain-adapted, welding sparks resistant, seawater resistant, UV resistant

Derating curve according to DIN 60512-5-2

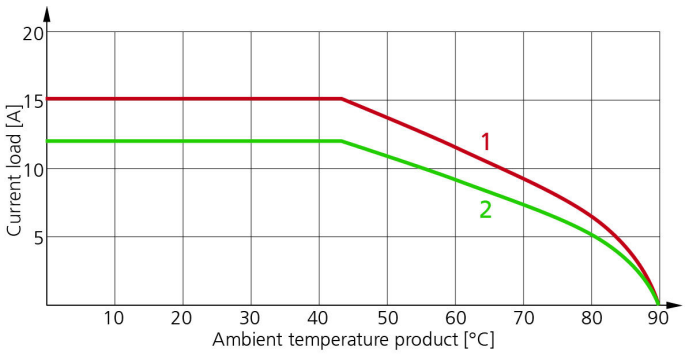

1: Base curve
2: Derived curve according to DIN 60512-5-2 with correction factor 0,8

UL installation note

https://www.escha.net/media/pdf/ESCHA_Kundeninformation_M12x1_POWER_UL_2020.pdf

Classification

eCl@ss 6.0	27279218
eCl@ss 7.0	27279218
eCl@ss 8.0	27279218
eCl@ss 9.0	27060311
ETIM 5.0	EC001855
ETIM 6.0	EC001855

The information contained in this data sheet was compiled with the utmost care. The liability for the correctness, completeness and timelines is limited to gross negligence.

Accessories

Mounting-clip, M12
https://www.escha.net/en/products/standard/accessories-for-connectivity/8047660

Torque-wrench set
https://www.escha.net/en/products/standard/accessories-for-connectivity/8055431

Screw cap, M12
https://www.escha.net/en/products/standard/accessories-for-connectivity?p=1&o=3&n=15&f=811

Link to product

https://www.escha.net/en/products/standard/power-connectors/8063992

The information contained in this data sheet was compiled with the utmost care. The liability for the correctness, completeness and timelines is limited to gross negligence.