## M12, female, straight, 3+PE, S-coded, POWER

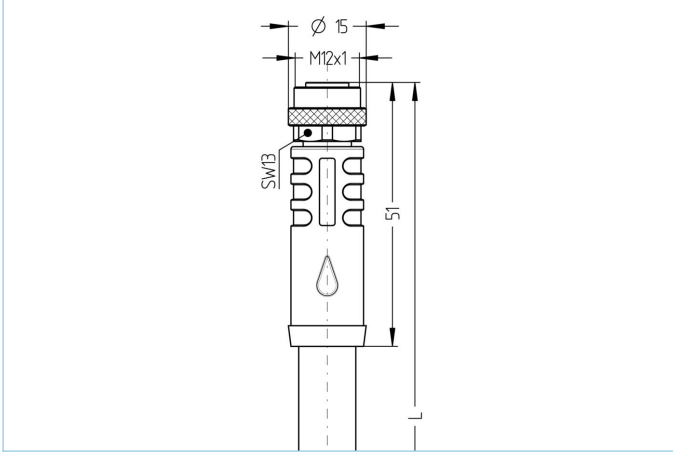

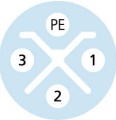


| Product data | |
|---|---|
| Item description | PS-AM12K4.155-2/S5015 |
| Item-No. | 8068091 |
| Length | 2m |
| Customs tariff-No. | 85444290 |
| Step-File | PS-AM12K4.155-L.stp |
| EAN | 4047106154172 |

| Technical data | |
|---|---|
| Connector | female, straight, M12 |
| Number of pins | 3+PE |
| Pin assignment | 1 BN, 2 BK, 3 GY, PE: GNYE |
| Coding | S |
| Rated voltage | 630$V_{AC}$ \| 600$V_{AC}$ (UL) |
| Current load per pin (at 40°C) | 12A |
| Insulation resistance | ≥$10^8$Ω |
| Ambient temperature product | -30°C...+90°C |
| Contact material | Metal, CuZn, gold-plated |
| Contact-carrier material | Plastic, PA, BK |
| Grip body material | Plastic, TPU, BK |
| Coupling nut material | Metal, CuZn, nickel-plated |
| Sealing (female) material | FPM/FKM |
| Standards | IEC 61076-2-111 |
| Degree of protection (mounted) | IP65, IP67, IP68 |
| Mechanical life-cycle | >100 mating cycles |
| Cable end assembly | open cable end |
| Degree of pollution | 3 |
| Style | straight |

The information contained in this data sheet was compiled with the utmost care. The liability for the correctness, completeness and timelines is limited to gross negligence.

| Cable web | PUR, UL, S5015, 1,5mm² |
|---|---|

High flexible and oil-resistant, halogen-free control cables for fixed-wired dynamic drag-chain applications with average loads. The PUR outer jacket is firm and resistant to high mechanical stresses like grinding or abrasion. They are adapted for applications in automation, load circuits of industrial machinery, automatic assembly- and placement machinery, especially in wet areas of machine tools and transfer lines. The cables meet the UL and CSA requirements.

| | |
|---|---|
| Outer diameter of jacket | 9.60 mm |
| Cable-jacket material | PUR |
| Jacket color | BK, similar RAL9005 |
| Wire cross-section | 4 x 1.5 mm² |
| Wire insulation material | PP |
| Wire colors | GY, BK, BN, GNYE |
| Wire structure | extra finely stranded class 6 |
| Bending radius (fixed) | 4 x Ø-cable |
| Bending radius (repeated) | 7,5 x Ø-cable |
| Temperature range (repeated) | -30°C...+90°C |
| Temperature range (fixed) | -40°C...+90°C |
| Temperature range (drag chain) | -25°C…+60°C |
| Temperature range (UL repeated) | -30°C...+80°C |
| Temperature range (UL fixed) | -40°C...+80°C |
| Drag chain-application | >8 Mio. cycles |
| Halogen-free | Yes |
| Torsion | +/-270°/m, ≥ 1 Mio. cycles |
| Rated voltage cable | VDE U0/U: 600V/1000V |
| Special features | flame retardant, halogen free, high flexibility, LABS free, microbes resistant, oil resistant, ozone resistant, recyclable, RoHs compliant, acid- and alkali resistant, drag chain-adapted, welding sparks resistant, seawater resistant, UV resistant |

## Derating curve according to DIN 60512-5-2

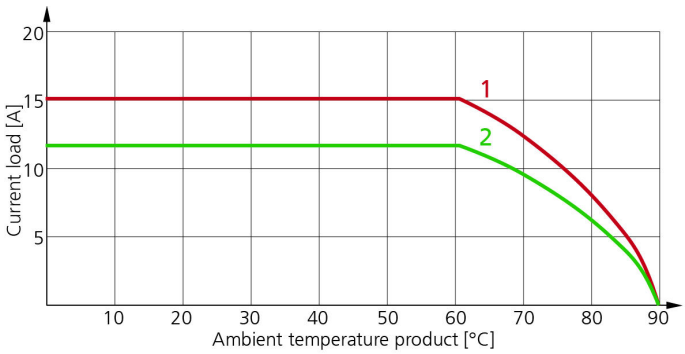


1: Base curve
2: Derived curve according to DIN 60512-5-2 with correction factor 0,8

## UL installation note

https://www.escha.net/media/pdf/ESCHA_Kundeninformation_M12x1_POWER_UL_2020.pdf

## Classification

| | |
|---|---|
| eCl@ss 6.0 | 27279218 |
| eCl@ss 7.0 | 27279218 |
| eCl@ss 8.0 | 27279218 |
| eCl@ss 9.0 | 27060311 |
| ETIM 5.0 | EC001855 |
| ETIM 6.0 | EC001855 |

The information contained in this data sheet was compiled with the utmost care. The liability for the correctness, completeness and timelines is limited to gross negligence.

## Accessories

Mounting-clip, M12
https://www.escha.net/en/products/standard/accessories-for-connectivity/8047660

Torque-wrench set
https://www.escha.net/en/products/standard/accessories-for-connectivity/8055431

Screw plug, M12
https://www.escha.net/en/products/standard/accessories-for-connectivity?p=1&o=3&n=15&f=812

## Link to product

https://www.escha.net/en/products/standard/power-connectors/8068091

The information contained in this data sheet was compiled with the utmost care. The liability for the correctness, completeness and timelines is limited to gross negligence.