M12, male, straight, 4 poles, Food & Beverage

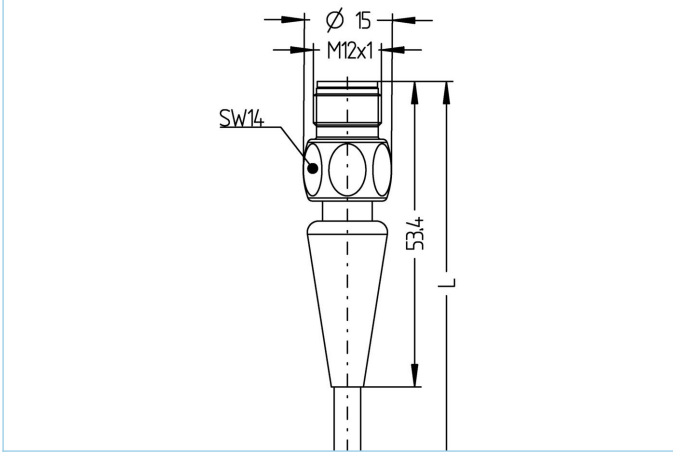

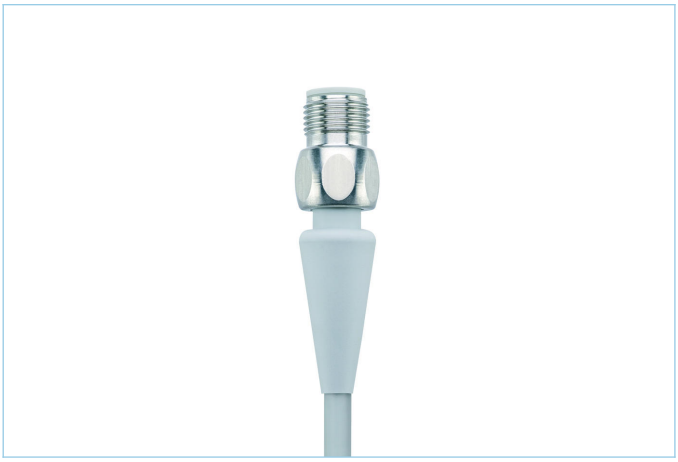

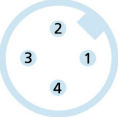

Product data	
Item description	FB-WASH4-2/S3930
Item-No.	8050470
Length	2m
Customs tariff-No.	85444290
Step-File	FB-WASH4.stp
EAN	4047106010317

Technical data	
Connector	male, straight, M12
Number of pins	4
Pin assignment	1 BN, 2 WH, 3 BU, 4 BK
Coding	A
Rated voltage	250V | 30V (UL)
Current load per pin (at 40°C)	4A
Insulation resistance	≥10^8Ω
Resistance	≤ 5mΩ
Ambient temperature product	-40°C...+105°C
Contact material	Metal, CuZn, gold-plated
Contact-carrier material	Plastic, PP, GY
Grip body material	Plastic, TPE, GY
Coupling nut material	Stainless steel, V4A
Standards	IEC 61076-2-101
Degree of protection (mounted)	IP65, IP67, IP68, IP69
Mechanical life-cycle	>100 mating cycles
Cable end assembly	open cable end
Degree of pollution	3
Style	straight

The information contained in this data sheet was compiled with the utmost care. The liability for the correctness, completeness and timelines is limited to gross negligence.

Cable web	TPE, UL, S3930, GY

TPE-coated cable with cores with polypropylene insulation. Resistant to all common acidic and alkaline cleaning agents and disinfectants. PVC-free plastics prevent discoloration and hardening caused by detergents. Predestined for use in the food and beverage industry. Due to the materials used, also suitable for use in machine and plant construction. High stability and good drag chain and torsion resistance.

Outer diameter of jacket	4.60 mm
Cable-jacket material	TPE
Jacket color	GY, similar RAL7035
Wire cross-section	4 x 0.34 mm²
Wire insulation material	PP
Wire colors	BN, WH, BU, BK
Wire structure	42 x 0.10 mm
Bending radius (fixed)	5 x Ø-cable
Bending radius (repeated)	10 x Ø-cable
Temperature range (repeated)	-25°C...+105°C
Temperature range (fixed)	-40°C...+105°C
Temperature range (drag chain)	-25°C…+60°C
Drag chain-application	≥ 5 Mio. cycles at max. 10 m/s² acceleration
Shielding	No
Halogen-free	Yes
Torsion	+/-180°/m, ≥ 2 Mio. cycles
UL AWM style	22126
Rated voltage cable	≤300 VAC
Special features	increased thermal load, halogen free, excellent acid- and alkali resistant, hydrolysis proof, LABS free, ozone resistant, recyclable, RoHs compliant, drag chain-adapted, seawater resistant, torsion resistant, verified resistance against P3-topactive, flexibility at low temperature, flexible at high temperatures

Classification	
eCl@ss 6.0	27279218
eCl@ss 7.0	27279218
eCl@ss 8.0	27279218
eCl@ss 9.0	27060311
ETIM 5.0	EC001855
ETIM 6.0	EC001855

Accessories

Torque-wrench set
https://www.escha.net/en/products/standard/accessories-for-connectivity/8055431

Cable Stripping Tool
https://www.escha.net/en/products/standard/accessories-for-connectivity/8066215

Cable Stripping Tool
https://www.escha.net/en/products/standard/accessories-for-connectivity/8066216

Food & Beverage, Adapter
https://www.escha.net/en/products/standard/accessories-for-connectivity/8063392

Link to product

https://www.escha.net/en/products/standard/connectors-for-the-food-industry/8050470

The information contained in this data sheet was compiled with the utmost care. The liability for the correctness, completeness and timelines is limited to gross negligence.