RJ45, male, straight, 4 poles, RJ45, male, straight, 4 poles, shielded, Industrial Ethernet 100 MBit/s

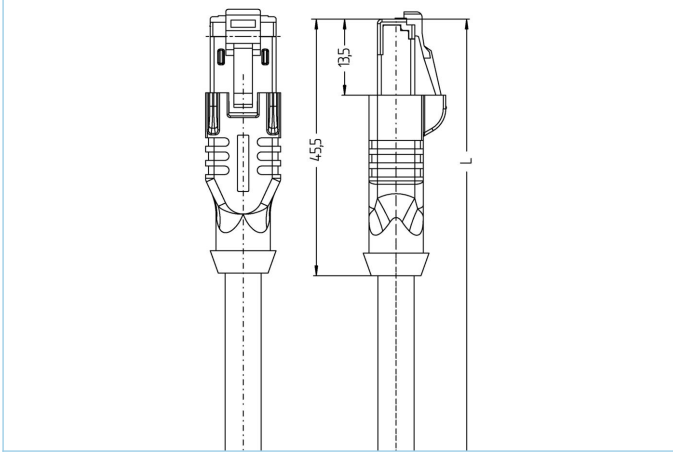

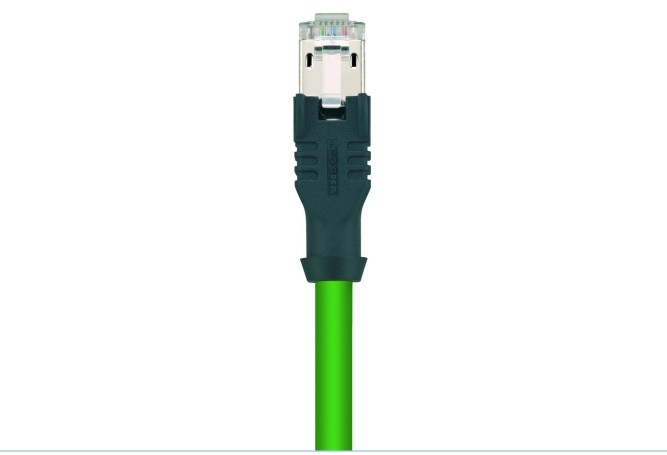

Product data	
Item description	IE-RJ45SS4.003-2-IE-RJ45SS4.003/S2171
Item-No.	8062324
Length	2m
Customs tariff-No.	85444290
Step-File	IE-RJ45SS4-m-IE-RJ45SS4.stp
EAN	4047106148638

Technical data	A-side	B-side
Connector	male, straight, RJ45	male, straight, RJ45
Number of pins	4	4
Pin assignment	1 YE, 2 OG, 3 WH, 6 BU	1 YE, 2 OG, 3 WH, 6 BU
Allocation	Industrial	Industrial
Rated voltage	60V	60V
Current load (at 40°C)	1A	1A
Insulation resistance	≥10^8Ω	≥10^8Ω
Transmission features	Cat5e	Cat5e
Ambient temperature product	-40°C...+70°C	-40°C...+70°C
Contact material	Metal, CuZn, gold-plated	Metal, CuZn, gold-plated
Contact-carrier material	Plastic	Plastic
Grip body material	Plastic, TPU, BK	Plastic, TPU, BK
Shielding	with shielding	with shielding
Material of shielding housing	Metal, CuZn, nickel-plated	Metal, CuZn, nickel-plated
Standards	IEC 60603-7-5	IEC 60603-7-5
Degree of protection (mounted)	IP20	IP20
Mechanical life-cycle	>750 mating cycles	>750 mating cycles
Degree of pollution	1	1

Advanced technical data UL

The information contained in this data sheet was compiled with the utmost care. The liability for the correctness, completeness and timelines is limited to gross negligence.

Cable web	Cat5e, PUR, UL, S2171, PROFINET

Shielded, PUR-cable for industrial applications. The cable is CMX-verified or meets the Cat5e (electrical properties of EN 50288-2-1) requirements. Materials and a constructive setup allow for increased mechanical stresses (abrasion, bending, vibrations etc.) of the cable. A drag-chain application with up to 3 million bending cycles is possible.

Outer diameter of jacket	6.50 mm
Cable-jacket material	PUR
Jacket color	GN, similar RAL6018
Wire cross-section	1 x 4 x AWG22, star quad
Wire insulation material	FRNC
Wire colors	WH, BU, OG, YE
Wire structure	7 x 0.25 mm
Bending radius (fixed)	4 x Ø-cable
Bending radius (repeated)	8 x Ø-cable
Temperature range (repeated)	-30°C...+70°C
Temperature range (fixed)	-40°C...+75°C
Drag chain-application	3 Mio. bending cycles
Acceleration Drag chain	max. 4m/s²
Halogen-free	Yes
Transmission features	Cat5e
Rated voltage cable	600 V UL rating
Special features	flame retardant, halogen free, high flexibility, hydrolysis proof, LABS free, microbes resistant, oil resistant, ozone resistant, PROFINET Type C, recyclable, RoHs compliant, acid- and alkali resistant, drag chain-adapted, seawater resistant, UN ECE R 118, UV resistant
Geschwindigkeit Schleppkette	max. 4m/s

Classification	
eCl@ss 6.0	27061801
eCl@ss 7.0	27060308
eCl@ss 8.0	27060308
eCl@ss 9.0	27060308
ETIM 5.0	EC002599
ETIM 6.0	EC002599

Accessories

Unlocking clip for RJ45
https://www.escha.net/en/products/standard/accessories-for-connectivity?p=1&o=3&n=15&f=807

Link to product

https://www.escha.net/en/products/standard/data-connectors/8062324