M8, male, straight, 4 poles, shielded, Industrial Ethernet

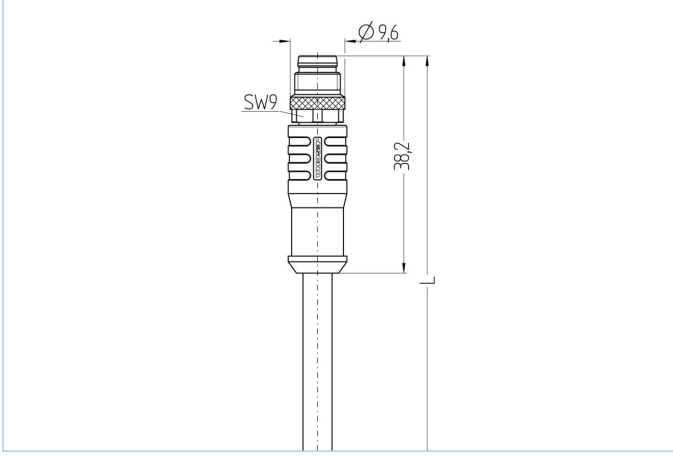

Product data	
Item description	IE-SSPS4.027-2/S3400
Item-No.	8055529
Length	2m
Customs tariff-No.	85444290
Step-File	IE-SSPS4-m.stp
EAN	4047106139605

Technical data	
Connector	male, straight, M8
Number of pins	4
Pin assignment	1 WHOG, 2 WHBU, 3 BU, 4 OG
Coding	A
Rated voltage	60V
Current load per pin (at 40°C)	4A
Insulation resistance	$\geq 10^8 \Omega$
Resistance	≤ 5mΩ
Transmission features	Cat5e
Ambient temperature product	-30°C...+90°C
Contact material	Metal, CuZn, gold-plated
Contact-carrier material	Plastic, PA, BK
Grip body material	Plastic, TPU, BK
Coupling nut material	Metal, CuZn, nickel-plated
Shielding	with shielding
Standards	IEC 61076-2-104
Degree of protection (mounted)	IP65, IP67, IP68
Mechanical life-cycle	>100 mating cycles
Cable end assembly	open cable end
Degree of pollution	3/2
Style	straight

The information contained in this data sheet was compiled with the utmost care. The liability for the correctness, completeness and timelines is limited to gross negligence.

Cable web	Cat5e, PUR, UL, S3400

Shielded PUR Ethernet-cable for industrial applications. Fits to real-time requirements according to IEC61158. The cable meets the UL-Style 21815 (80°/300V)- and the Cat5 (electrical properties according to EN50288-2-2) requirements. Materials and a constructive setup for increased mechanical stresses (abrasion, bending, vibrations etc.) of the cable. Drag-chain/torsion operations are possible. High tensile strength through incorporated Kevlar-strands.

Outer diameter of jacket	4.80 mm
Cable-jacket material	PUR
Jacket color	GN, similar RAL6018
Wire cross-section	1 x 4 x AWG26, star quad
Wire insulation material	PP
Wire colors	WHBU/BU, WHOG/OG
Wire structure	19 x 0.10 mm
Bending radius (fixed)	4 x Ø-cable
Bending radius (repeated)	7,5 x Ø-cable
Temperature range (repeated)	-30°C...+70°C
Temperature range (fixed)	-40°C...+80°C
Transmission features	Cat5e
Rated voltage cable	300 V UL rating
Special features	halogen free, high flexibility, hydrolysis proof, LABS free, microbes resistant, oil resistant, ozone resistant, recyclable, RoHs compliant, acid- and alkali resistant, drag chain-adapted, seawater resistant, UV resistant

Classification	
eCl@ss 6.0	27060307
eCl@ss 7.0	27060307
eCl@ss 8.0	27060307
eCl@ss 9.0	27060307
ETIM 5.0	EC000830
ETIM 6.0	EC000830

Accessories

Mounting-clip, M8
https://www.escha.net/en/products/standard/accessories-for-connectivity/8047658

Torque-wrench set
https://www.escha.net/en/products/standard/accessories-for-connectivity/8055431

Marking rings Ø 9mm
https://www.escha.net/en/products/standard/accessories-for-connectivity?p=1&o=3&n=15&f=809

Screw cap, M8
https://www.escha.net/en/products/standard/accessories-for-connectivity/8081761

Cable Stripping Tool
https://www.escha.net/en/products/standard/accessories-for-connectivity/8066215

Cable Stripping Tool
https://www.escha.net/en/products/standard/accessories-for-connectivity/8066216

Link to product

https://www.escha.net/en/products/standard/data-connectors/8055529

The information contained in this data sheet was compiled with the utmost care. The liability for the correctness, completeness and timelines is limited to gross negligence.