M9538 SERIES

8 CHANNELS, 100A, POWER DISTRIBUTION UNIT

PRODUCT DESCRIPTION

M9538 series is an 8-channel power distribution unit, designed for airborne applications. It distributes 28VDC through overload and short-circuit protected switches. The M9538 series supports Ethernet communication to control, configure and get the status of the device.

- Programmable current limits
- Adjustable soft-starting
- 10/100 Ethernet control
- Input reverse protection
- Output reverse protection

STANDARD CONFIGURATIONS

Part Number	High Current Switch	Low Current Switch	Special Features
M9538-100	25A: Outputs 1-3 15A: Outputs 4-8	N/A	
M9538-101	N/A	5A: Outputs 1-8	
M9538-102	30A: Outputs 1-2 10A: Outputs 3-4 5A: Outputs 5-8	N/A	Extended communication (see commands description)

* Additional standard configurations available. **Contact factory for more details**.
* For **REACH** configuration please see M9539.

SPECIAL FEATURES

- User defined maximum current per channel – Current Limit Protection
- Large capacitance charge capability
- 1 input; 8 outputs Power Distribution Unit.
- Configurable current breaker per Switch – Overload Protection Switch
- I^2t curve for overload switching delay duration.
- Configurable turn-on sequence by card wakeup and by discrete input
- Meets MIL-STD-704A-F, DO160G & EN2282
    - Steady state Voltage levels 16V - 55V
    - Reverse voltage protection for both card and Loads.
- Meets MIL-STD- 461E/F.
- Interface and control:
    - Ethernet Interface (Static & Dynamic IP configurations)
    - 3 Discrete inputs (DCI, RAT, WP)
    - 1 Discrete output (Trip error output)
    - Manual shutdown input

SPECIFICATIONS

Input	**Voltage**	16 to 55VDC steady state. Compliant with MIL-STD-704A-F, DO-160G, EN2282
	Surges and Spikes	IAW MIL-STD-704F and DO-160G, section 16.0 cat Z. Input clamp at 80V for device and loads.
	Reverse Polarity Protection	Device and loads protected on occasion of reverse voltage application.
	Under Voltage Lockout	Device and outputs turn off when input voltage drops below 5.5 V. Device turns back on when input voltage rises above 6 V.
High Current Switch	**Rating**	See Outputs Rating Table on page 2
	Drop Voltage	175mV maximum at rated current.
	Overload Protection	Configurable from 2A up to outputs rated current with 5% accuracy using OVERLOAD register. Trip by I^2t curve see overload curve.
	Short Circuit Protection	Configurable from 10A to 125A with 20% accuracy using CURR_LIMIT parameter. Protection is active, preventing from the short to spread through system. See short circuit curve.
	Capacitive Load Charge	3mF @ Vin = 33V, I_{LIM}= 125A Option to charge much greater capacitance, consult factory.
	Paralleling Outputs	Outputs can be paralleled to achieve one common channel with large current limit
Low Current Switch	**Rating**	See Outputs Rating Table on page 2
	Drop Voltage	60mV maximum at rated current.
	Overload Protection	Configurable from 0.375A up to outputs rated current with 5% accuracy. Trip by I^2t curve.
	Short Circuit Protection	Configurable from 2A to 25A with 20% accuracy. Protection is active, preventing from the short to spread through system.
	Capacitive Load Charge	3mF @ Vin = 33V, I_{LIM}= 25A Option to charge much greater capacitance, consult factory.
	Paralleling Outputs	Outputs can be paralleled to achieve one common channel with large current limit
Control & Indication	**Ethernet**	100Base-TX fast ethernet. Communication through simple UDP messages. IP can be static or dynamic.
	Discrete Inputs	Three inputs for functionality control: DCI – Enables a Macro. RAT – Resets all tripped channels. WP – Write protect for the non-volatile RAM. See overview.
	Discrete Output	Has one fault indication (see overview)
	Measurements	Input and outputs voltages Outputs current Device Temperature

SPECIFICATIONS (Cont.)

Environment Designed to meet	**Ambient Temperature**	Non-operating ambient : -55°C to +125°C Operating : -55°C to + 85°C. (at baseplate)
		MIL-STD-810G, Methods 501.6 and 502.6, Proc. I & II Non-operating ambient : -50°C to +70°C Operating : -40°C to + 55°C.
	Humidity	DO-160G, section 6.3.2, Category B
		MIL-STD-810G, Method 507.6, Proc. II Up to 95%±4% (including condensation)
	Salt-fog	Per MIL-STD-810G, Method 509.6
		Per MIL-STD-810H, Method 509.7
	Altitude	MIL-STD-810H Method 500.6, Procedure I & II, 40,000 ft., and 70,000 ft. Operational
		MIL-STD-810G, Method 500.7, Proc. I & II Non-operating : 28,000 feet Operating : 15,000 feet
	Mechanical Shock	Saw-tooth, 40 g peak, 11 ms.
		MIL-STD-810G, Method 516.7, Proc II ±20g 11msec, saw tooth
	Vibration	MIL-STD-810H Method 514.8 Category 4: US highway truck vibration exposure and Category 8: C-130, four-blade propeller aircraft cargo bay
	Contamination by Fluids	MIL-STD-810G, Method 504.2 Cooling Liquid: Ethylene Glycol + Corrosion inhibitors Grease (Topaz NB52) (MFG: Kluber)
	Acceleration Operational	MIL-STD-810G, Method 513.7, Proc II 1g for all axes (X, Y, Z) - Any combination of 2 axes simultaneously Note: Axis Z in addition to gravity
	Transportation vibration	MIL-STD-810G, Method 514.7, Proc I - Cat 4, 7, 10, 11
	Icing	No water accumulation permitted which cause structural damage upon freezing. Note: Snow and icing shall be removed from the units before operating as required according to system's technical manual
	Fungus	Does not support fungus growth, in accordance with the guidelines of MIL-STD-454, Requirement 4.
	Rain	MIL-STD-810G, Method 506.6 Proc. I Blowing Rain: 1.7 mm/ min
EMI	**MIL-STD-461G**	CE101, CE102, CS101 CS114 (10 kHz to 400 MHz, Curve #5), CS115, CS116, RE101, RE102 (Fixed wing external), RS101 and RS103 (2 MHz to 18 GHz 50 V/m). Al tests are at full load and in accordance with the provisions of MIL-STD-461G – with shielded signals.
MTBF	100,000 hours, calculated per MIL-STD-217F N2 at +85 °C at baseplate, Ground Fixed	
Weight	1.55 Kg	

	Refference	Function	PDU Connector P/N	Mating Connector P/N
Connectors for -1xx	J1	Power Input	TE # DTS20W23-24320PN-004	TE #DTS26W23-24320SN-S04
	J2	Power Output	D38999/20WJ11SN	D38999/26WJ11PN
	J3	Power Output	D38999/20WG11SN	D38999/26WG11PN
	J4	Control	D38999/20WB35SN	D38999/26WB35PN
Connectors for -8xx	Refference	Function	PDU Connector P/N	Mating Connector P/N
	J1	Power Input	TE # DTS20Z23-24320PN-004	TE #DTS26Z23-24320SN-S04
	J2	Power Output	D38999/20ZJ11SN	D38999/26ZJ11PN
	J3	Power Output	D38999/20ZG11SN	D38999/26ZG11PN
	J4	Control	D38999/20ZB35SN	D38999/26ZB35PN

Default settings for -100 from factory and after ERASE_DATA command:

- Static IP mode
- Static IP address: 192.168.0.51
- OVERLOAD current limits set to channel maximum values.
- Short-circuit current limit set to 125A for 25A channels, 80A for 15A channels
- All channels off
- No Groups
- DCI is empty

Default settings for -102 from factory and after ERASE_DATA command:

- Static IP mode
- Static IP address: 192.168.0.51
- All channels off at start
- No Groups
- DCI is empty.
- Current settings per table:

Output	Overload limit	Short circuit limit	Output	Overload limit	Short circuit limit
1	30	125	**5**	5	25
2	30	125	**6**	5	25
3	10	50	**7**	5	25
4	10	50	**8**	5	25

PIN ASSIGNMENT

J1 - Input	
DTS20W23-24320PN-004	
Pin	**Function**
A	NC
B	28VDC
C	NC
D	NC
E	28VDC_RTN

J2 - Output	
D38999/20WJ11SN	
Pin	**Function**
A	OUT1 – 25A
B	OUT1_RTN
C	OUT2 – 25A
D	OUT2_RTN
E	OUT3 – 25A
F	OUT3_RTN
G	OUT4 – 15A
H	OUT4_RTN
J	NC
K	NC
L	NC

J4 - Control	
D38999/20WB35SN	
Pin	**Function**
1	TX+
2	TX-
3	NC
4	NC
5	NC
6	RX-
7	RX+
8	DCI
9	RAT
10	SHUTDOWN
11	WP
12	FAULT
13	DGND (Connected to 28VDC_RTN internally)

J3 - Output	
D38999/20WG11SN	
Pin	**Function**
A	OUT5 – 15A
B	OUT5_RTN
C	OUT6 – 15A
D	OUT6_RTN
E	OUT7 – 15A
F	OUT7_RTN
G	OUT8 – 15A
H	OUT8_RTN
J	NC
K	NC
L	NC

Typical Characteristics

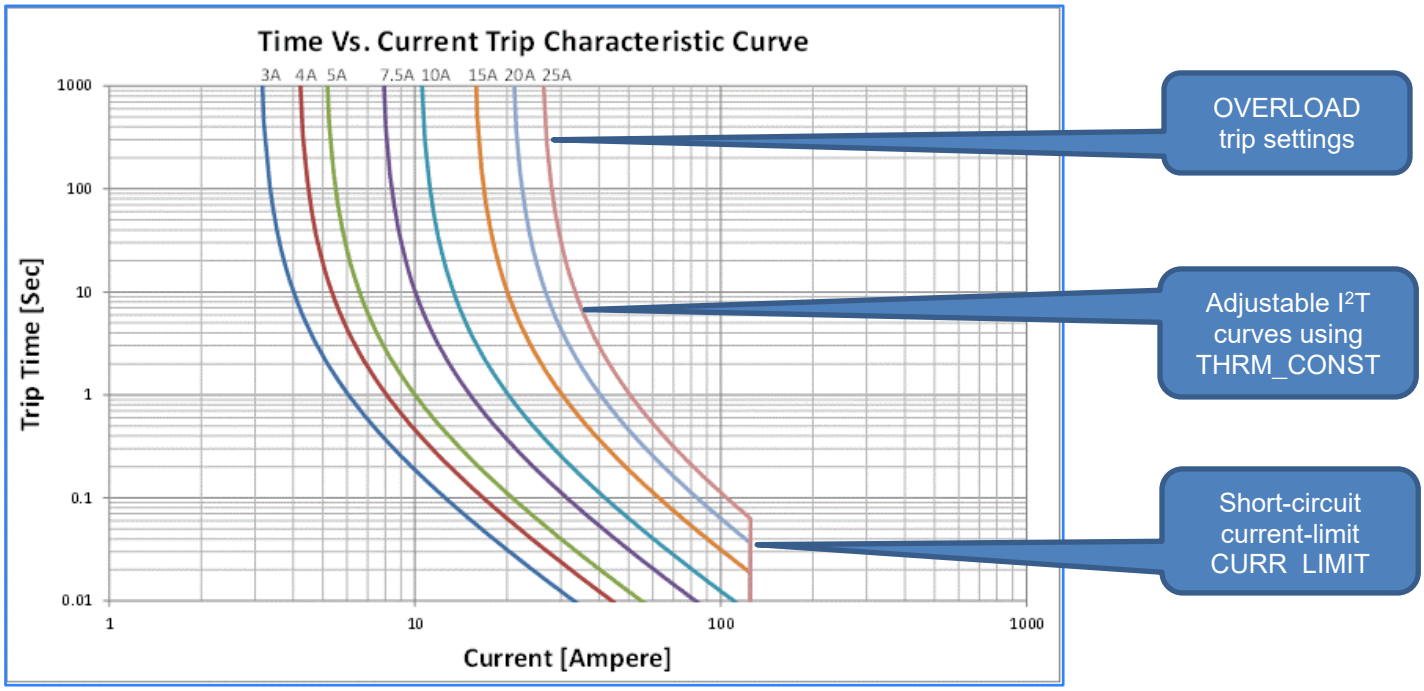

Figure 1 - Time vs. Current Overload Trip

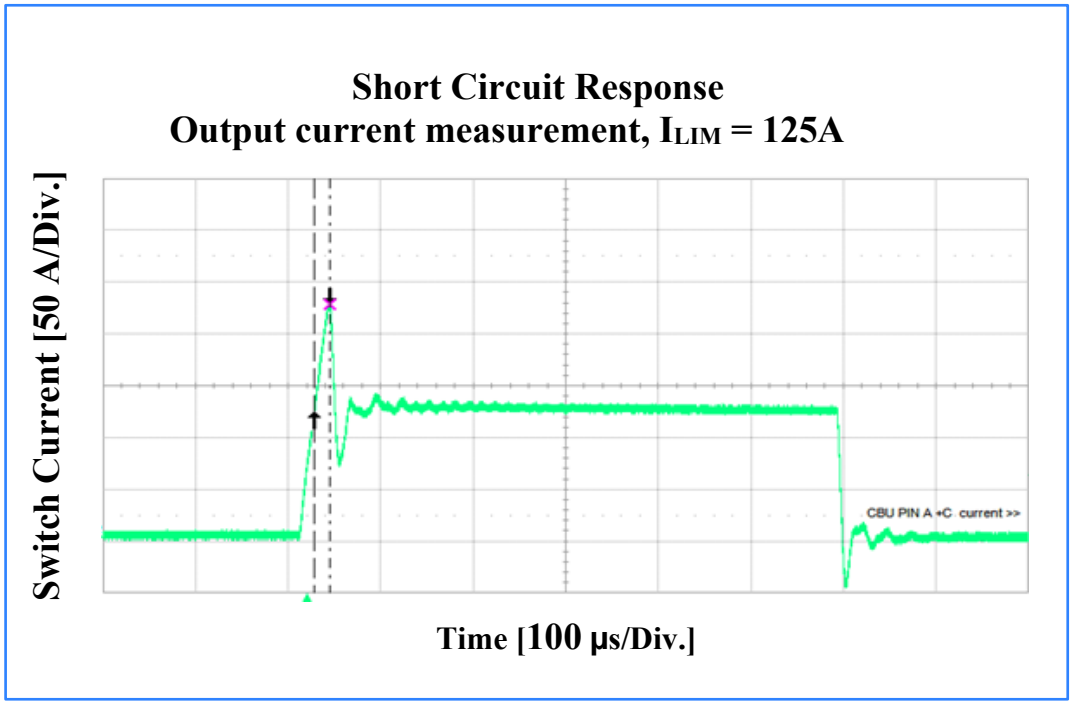

Figure 2 - Short Circuit Response

OVERVIEW

Interface Description

POR

Power On Reset (POR) is a sequence of operations that happens automatically when device starts up. The PDU can start pre-defined switches automatically on POR and wait a predefined amount of time between each switch. The delay and sequencing options let the whole system to start smoothly with as low as possible stress.

To configure POR the user should send the SET_POR command with the channel order and the corresponding delays. See communication section.

Discrete Inputs

M9538 series has 3 discrete inputs which can help control the device:

WP - active high input signal. When left high-z WP will be write protected. if pulled to DGND , WP will be write enabled.

DCI – pulling to DGND will trigger a macro. Macro can enable or disable selected outputs. Each output can turn on or off in delay from previous output.

RAT –pulling to DGND will trigger reset of the trip status of all tripped outputs.

SHDN – active low input signal. While pulled to DGND outputs are disabled.

DGND is the return of the signals.

Each input has the following interface:

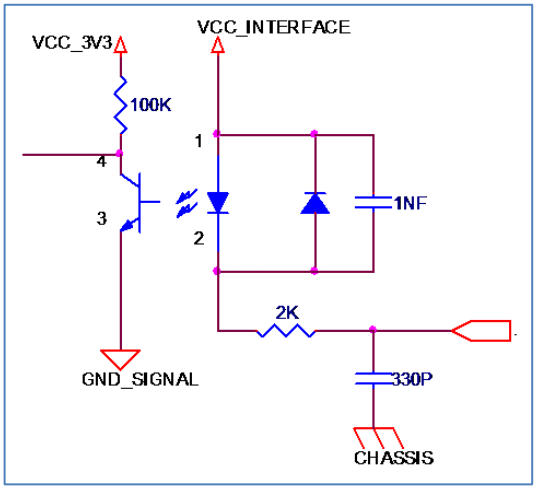

Figure 3 – Discrete input interface

Discrete Outputs

FAULT is active low signal, if any of the outputs trip, then the FAULT signal is shorted to DGND.

FAULT_OUT has the following interface:

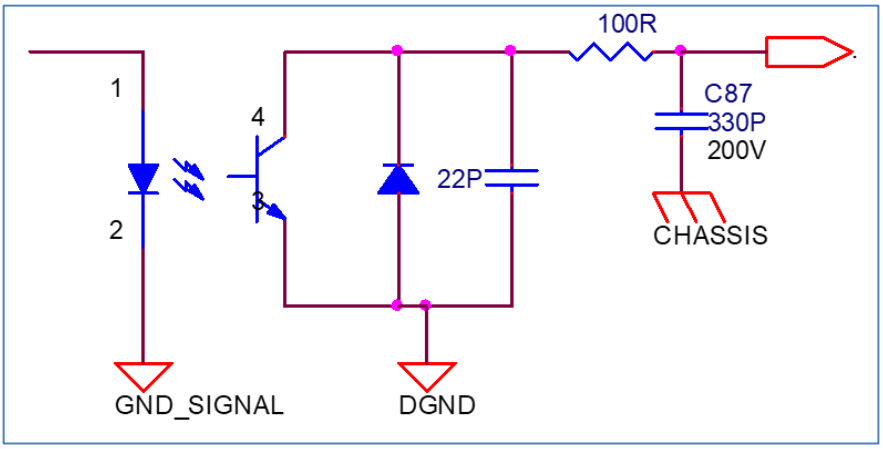

Figure 4 – Fault output interface

COMMUNICATION INTERFACE

Interface Description

M9538 series supports a protocol based on standard UDP packets. The IP address for the device can be dynamic provided by DHCP server, or static by a specific command. for the M9538 series the default configuration is static IP. Other options can be provided.
Each PDU will respond to both unicast as well as broadcast messages. The PDU receives incoming UDP messages through port 5000. The PDU sends autonomous UDP messages (keepalive) in broadcast to port number 5010. The Status message is sent once at broadcast to port number 5020 in case of an alert, without status message request.
The messages using standard data types (INT8, UINT8, CHAR, etc.), all data is arranged in big-endian (network byte order) . The data is packed one byte alignment.

Software Update

The PDU firmware and software supports the option of updating via Ethernet, in parallel to normal operation of the PDU.
Update is performed via TFTP, when the PDU is the TFTP client.
For update information consult factory.

MESSAGES

Message structure

Message structure will be of the form:

Field		Description	Value \ LSB	Type
Header	Op-Code	Message op-code		UINT8
	Length	Total message length in bytes (including Op-Code)		UINT16
Body	XXX	Message specific		UINT8[]

Summary of Messages ID

	Message	Opcode	From	To	Description
1	GET_STATUS	0x74	SERVER	PDU	Request the complete PDU status.
2	STATUS	0x75	PDU	SERVER	Response for op-code 0x74.
3	GET_PDU_INFO	0x76	SERVER	PDU	P/N, S/N, FW Ver, SW Ver.
4	PDU_INFO	0x77	PDU	SERVER	Response for op-code 0x76.
5	SET_OUTPUT	0x80	SERVER	PDU	Control of the switch or group's output
6	OUTPUT _ACK	0x81	PDU	SERVER	Response for op-code 0x80.
7	TRIP_RESET	0x82	SERVER	PDU	Reset selected tripped channels.
8	TRIP_RESET _ACK	0x83	PDU	SERVER	Response for op-code 0x82.
9	RESET	0x84	SERVER	PDU	Initiate reset of the PDU.
10	RESET_ACK	0x85	PDU	SERVER	Response for op-code 0x84.
11	SET_BATTLE	0x86	SERVER	PDU	Control of the switch output
12	BATTLE _ACK	0x87	PDU	SERVER	Response for op-code 0x86.
13	SET_LIMIT	0x90	SERVER	PDU	Sets the current threshold levels.
14	SET_LIMIT_ACK	0x91	PDU	SERVER	Response for op-code 0x90.
15	SET_GROUP	0x92	SERVER	PDU	Sets outputs to groups
16	GROUP_ACK	0x93	PDU	SERVER	Response for op-code 0x92.
17	SET_POR_MACRO	0x94	SERVER	PDU	Sets power on reset macro
18	POR_ACK	0x95	PDU	SERVER	Response for op-code 0x94.
19	SET_DCI_MACRO	0x96	SERVER	PDU	Sets discrete input macro
20	DCI_ACK	0x97	PDU	SERVER	Response for op-code 0x96.
21	SET_IP_MODE	0x98	SERVER	PDU	Set IP static or dinamic and the default IP
22	IP_MODE_ACK	0x99	PDU	SERVER	Response for op-code 0x99
23	GET_CONFIG	0x9A	SERVER	PDU	Requests the full configuration data from PDU
24	CONFIG	0x9B	PDU	SERVER	Response for op-code 0x9B

25	ERASE_DATA	0x9C	SERVER	PDU	Erase all non volotile data (all configuration except for software and firmware itself)
26	ERASE_ACK	0x9D	PDU	SERVER	Response for op-code 0x9D.
27	SET_MULTI_IP	0x9E	SERVER	PDU	Sets multicast IP and port for all outgoing messages (extended communication only).
28	NULTI_IP_ACK	0x9F	PDU	SERVER	Response for op-code 0x9E (extended communication only).
29	KEEPALIVE	0x5A	PDU	SERVER	Periodic autonomous status report sent by the PDU. Broadcast message.
30	SET_DEBUG	0xB0	SERVER		Future debug options
31	DEBUG_ACK	0xB1	PDU	SERVER	Response for op-code 0xB0.
32	GET_SW_INFO	0xCA	SERVER	PDU	Request SW related info.
33	SW_INFO	0xCB	PDU	SERVER	Response for op-code 0xCA.
34	SET_SW_UPDATE	0xCC	SERVER	PDU	Initiate a SW update process.
35	SW_UPDATE_ACK	0xCD	PDU	SERVER	Response for op-code 0xCC.

Messages Description

Status Messages

GET_STATUS

This message is sent to the PDU to poll the status of the PDU.

Message:

Field	Description	Value	Type
Op-Code	Message op-code	0x74	UINT8
Length	Total message length in bytes (including Op-Code)	3(decimal)	UINT16

Response:

Field	Description	Value	Type
Op-Code	Message op-code	0x75	UINT8
Length	Total message length in bytes (including Op-Code)	62 (decimal)	UINT16
SW_STATE	Reading for each physical state of the output switches	8 bits - first (LSB) for OUT1 Possible values for each byte: 0 - Switch Disconnected 1 – Switch Connected	UINT8
SW_CMD	Reading for last command or automatic setting for each of the output switches	8 bits - first (LSB) for OUT1 Possible values for each byte: 0 - Switch Off 1 – Switch On	UINT8

Field	Description	Value	Type
TRIP_STAT	Trip status for each of the outputs	8 bytes - first (MS Byte) for OUT1 and last (LS Byte) for OUT8. Possible values for each byte: 0 - No error 1 – Trip due to overload 2 – Trip due to short-circuit	UINT8[8]
BTL_MODE	Battle mode status for each output. In case of overload switch will not disconnect, in case of short-circuit an auto retry will be made.	8 bits - first (LSB) for OUT1 Possible values for each byte: 0 - Normal operation 1 – Battle mode operation	UINT8
BIT	BIT status for each output. BIT is engaged when a PDU self-error is occurred such as: switch is off while the output voltage is high	8 bits - first (LSB) for OUT1 Possible values for each byte: 0 - Normal status 1 – BIT error	UINT8
OUT_VOLT	Output voltage reading for each channel	16 bytes – first two bytes (MS Byte) for OUT1 and last two bytes (LS Byte) are for OUT8. LSB = 0.0625V	INT16[8]
OUT_CURR	Current reading for each output	16 bytes – first two bytes (MS Byte) for OUT1 and last two bytes (LS Byte) are for OUT12. LSB = 0.0625A	INT16[8]
CHANNEL_GROUP	Each channel's Group	8 bytes - first (MS Byte) for OUT1 and last (LS Byte) for OUT8. Possible values for each byte: 0 - No Group 1 – 8 – Group 1 -8	UINT8[8]
INPUT_VOLT	Input voltage reading	LSB = 0.0625V	INT16
INPUT_CURR	Input current reading	LSB = 0.0625A	INT16
TEMP	Temp Sensor Temperature. In two's complement	LSB=0.0625^{0}C	INT16
ERROR_STAT	Error status for entire device (and LED status). A combination of errors can occur by summing the values.	0x00 – Normal 0x01 – Trip fault 0x02 – BIT Error 0x04 – Temperature warning	UINT8

GET_PDU_INFO

This message is sent to the PDU to read PDU info - P/N, S/N and SW Ver.

Message:

Field	Description	Value	Type
Op-Code	Message op-code	0x76	UINT8
Length	Total message length in bytes (including Op-Code)	3 (decimal)	UINT16

Response: PDU_INFO

Message:

Field	Description	Value	Type
Op-Code	Message op-code	0x77	UINT8
Length	Total message length in bytes (including Op-Code)	59 (decimal)	UINT16
P/N	Part Number ASCII format	"M9538-100.-" e.g.	CHAR[16]
S/N	Serial Number decimal ASCII format	“XXXXXXX”	CHAR[8]
SW Ver	MCU version number. YYYY – Year MM – Month DD – Day MMM – Major version mmm – Minor version bbb - Build	YYYYMMDD_MMM.mmm.bbb	CHAR[32]

Control Messages

SET_OUTPUT

This message is sent to the PDU to control the outputs.

Message:

Field	Description	Value	Type
Op-Code	Message op-code	0x80	UINT8
Length	Total message length in bytes (including Op-Code)	5 (decimal)	UINT16
OUTPUT	Details which specific output to activate/deactivate.	1-8 – outputs 1 to 8 129-136 – groups 1 to 8 (129 is for group 1)	UINT8
VALUE	Actual required command for selected output	Possible values: 0 – Output off 1 – Output on	UINT8

Response:

	Description	Value	Type
Op-Code	Message op-code	0x81	UINT8
Length	Total message length in bytes (including Op-Code)	4 (decimal)	UINT16
Ack/Nack	Field	0 - Acknowledge 1 – Not acknowledge	UINT8

TRIP_RESET

This message is sent to the PDU in order to reset the tripped channels.

Message:

Field	Description	Value	Type
Op-Code	Message op-code	0x82	UINT8
Length	Total message length in bytes (including Op-Code)	4 (decimal)	UINT16
OUTPUT	Details which specific channels to reset.	1-8 – outputs 1 to 8 129-136 – groups 1 to 8 (129 is for group 1)	UINT8

Response:

Field	Description	Value	Type
Op-Code	Message op-code	0x83	UINT8
Length	Total message length in bytes (including Op-Code)	4 (decimal)	UINT16
Ack/Nack		0 - Acknowledge 1 – Not acknowledge	UINT8

RESET

This message is to the PDU in order to reset its MCU (usually after a software update process), if it is sent in the middle of the update process it will stop it and the will start normally using the previous (last good version that was in use prior to the failure attempt) version.

Message:

Field	Description	Value	Type
Op-Code	Message op-code	0x84	UINT8
Length	Total message length in bytes (including Op-Code)	3 (decimal)	UINT16

Response: RESET_ACK

Message:

Field	Description	Value	Type
Op-Code	Message op-code	0x85	UINT8
Length	Total message length in bytes (including Op-Code)	4 (decimal)	UINT16
Ack/Nack	IP address of TFTP server for firmware update process	0 – Ack 1 – Nack	UINT8

SET_BATTLE

This message is sent to the PDU to set selected outputs in to battle mode. In battle mode the overload tripping will be disabled leaving only the short-circuit current limit (CURR_LIMIT) active in auto retry mode.

Message:

Field	Description	Value	Type
Op-Code	Message op-code	0x86	UINT8
Length	Total message length in bytes (including Op-Code)	5 (decimal)	UINT16
OUTPUT	Details which specific channels to be affected.	1-8 – outputs 1 to 8 129-136 – groups 1 to 8 (129 is for group 1)	UINT8
VALUE	Actual required command for each selected output	Possible values: 0 – Battle off 1 –Battle on	UINT8

Response:

	Description	Value	Type
Op-Code	Message op-code	0x87	UINT8
Length	Total message length in bytes (including Op-Code)	4 (decimal)	UINT16
Ack/Nack	Field	0 - Acknowledge 1 – Not acknowledge	UINT8

Configuration Messages

SET_LIMIT

This message is sent to the PDU to change the limits for the outputs.

Message:

Field	Description	Value	Type
Op-Code	Message op-code	0x90	UINT8
Length	Total message length in bytes (including Op-Code)	10 (decimal)	UINT16
OUTPUT	Details which specific channels to be affected.	1-8 – outputs 1 to 8 129-136 – groups 1 to 8 (129 is for group 1)	UINT8
OVERLOAD	Overload current limit setting for selected output. Overload resolution is ~0.5A. this command format is in higher resolution in order to achieve a uniform structure.	LSB = 0.0625A	INT16
CURR_LIMIT	Short-circuit current limit setting for selected output. Current limit resolution is ~0.5A. this command format is in higher resolution in order to achieve a uniform structure.	LSB = 0.0625A	INT16
THRM_CONST	Thermal constant for overload trip. Value is the trip time for twice the overload current	Time in milliseconds 1 - 5000	INT16

Response:

	Description	Value	Type
Op-Code	Message op-code	0x91	UINT8
Length	Total message length in bytes (including Op-Code)	4 (decimal)	UINT16
Ack/Nack	Field	0 - Acknowledge 1 – Not acknowledge 2 – EEPROM write protected (data will be lost after reset)	UINT8

SET_GROUP

This message is sent to the PDU to assign outputs to a group.

Message:

Field	Description	Value	Type
Op-Code	Message op-code	0x92	UINT8
Length	Total message length in bytes (including Op-Code)	12 (decimal)	UINT16
GROUP	Details which specific output to activate/deactivate.	1 -8 – Groups 1 to 8	UINT8
CHANNELS	Channels assigned to group	Possible values: 1-8 – outputs 1 to 8 0 -array termination	UINT8[8]

Response:

	Description	Value	Type
Op-Code	Message op-code	0x93	UINT8
Length	Total message length in bytes (including Op-Code)	4 (decimal)	UINT16
Ack/Nack	Field	0 - Acknowledge 1 – Not acknowledge 2 – EEPROM write protected (data will be lost after reset)	UINT8

SET_POR_MACRO

This message is sent to the PDU to set the outputs to be automatically enabled upon startup.

Message:

Field	Description	Value	Type
Op-Code	Message op-code	0x94	UINT8
Length	Total message length in bytes (including Op-Code)	27 (decimal)	UINT16
CHAN_ON	Array of channels order to enable. If a channel is present twice in the array, then the first appearance will govern	Possible values: 1-8 – outputs 1 to 8 129-136 – groups 1 to 8 (129 is for group 1) 0 – Array termination.	UINT8[8]
CHAN_DELAY	Delay in milliseconds before each of the corresponding switch enable. CHAN_DELAY[i] is the delay before enable of CHAN_ON[i]	0 – 5000.	UINT16[8]

Response:

Field	Description	Value	Type
Op-Code	Message op-code	0x95	UINT8
Length	Total message length in bytes (including Op-Code)	4 (decimal)	UINT16
Ack/Nack		0 - Acknowledge 1 – Not acknowledge 2 – EEPROM write protected (MACRO didn't register)	UINT8

SET_DCI_MACRO

This message is sent to the PDU to set the outputs to be automatically enabled/disabled upon DCI change from open to short.

Message:

Field	Description	Value	Type
Op-Code	Message op-code	0x96	UINT8
Length	Total message length in bytes (including Op-Code)	35 (decimal)	UINT16
CHANNEL	Array of channels order control. The channels will be controlled by the order of the array.	Possible values: 1-8 – outputs 1 to 8 129-136 – groups 1 to 8 (129 is for group 1) 0 – Array termination.	UINT8[8]
CHANNEL_ STATE	Control for each of the corresponding switch enable. CHAN_STATE[i] is the state control for CHANNEL[i]	Possible values: 0 – OFF 1 - ON	UINT8[8]
CHAN_DELAY	Delay in milliseconds before each of the corresponding switch control.	0 – 5000.	UINT16[8]

Field	Description	Value	Type
	CHAN_DELAY[i] is the delay before control of CHANNEL[i]		

Response:

Field	Description	Value	Type
Op-Code	Message op-code	0x97	UINT8
Length	Total message length in bytes (including Op-Code)	4 (decimal)	UINT16
Ack/Nack		0 - Acknowledge 1 – Not acknowledge 2 – EEPROM write protected (MACRO didn't register)	UINT8

SET_IP_MODE (standard versions)

Selects static IP or dynamic IP mode and static IP address.

Message:

Field	Description	Value	Type
Op-Code	Message op-code	0x98	UINT8
Length	Total message length in bytes (including Op-Code)	12 (decimal)	UINT16
MODE	Selection of static or dynamic IP	Possible values: 0 – Dynamic IP 1 –Static IP	UINT8
IP	Setting of IP	Any IP address	UINT32
SUBNET	Subnet Mask for IP address	Any Mask address 255.255.255.0 e.g.	UINT32

Response:

Field	Description	Value	Type
Op-Code	Message op-code	0x99	UINT8
Length	Total message length in bytes (including Op-Code)	4 (decimal)	UINT16
Ack/Nack		0 - Acknowledge 1 – Not acknowledge 2 – EEPROM write protected (Setting didn't register)	UINT8

SET_IP_MODE (extended version)

Selects static IP or dynamic IP mode and static IP address.

Message:

Field	Description	Value	Type

Op-Code	Message op-code	0x98	UINT8
Length	Total message length in bytes (including Op-Code)	16 (decimal)	UINT16
MODE	Selection of static or dynamic IP	Possible values: 0 – Dynamic IP 1 –Static IP	UINT8
IP	Setting of IP	Any IP address	UINT32
SUBNET	Subnet Mask for IP address	Any Mask address 255.255.255.0 e.g.	UINT32
DEFGW	Default gateway address	Any IP address	UINT32

Response:

Field	Description	Value	Type
Op-Code	Message op-code	0x99	UINT8
Length	Total message length in bytes (including Op-Code)	4 (decimal)	UINT16
Ack/Nack		0 - Acknowledge 1 – Not acknowledge 2 – EEPROM write protected (Setting didn't register)	UINT8

SET_MULTI_IP (extended version)
Selects keep alive IP (default 255.255.255.255) and normal messages response IP and port.
Message:

Field	Description	Value	Type
Op-Code	Message op-code	0x9E	UINT8
Length	Total message length in bytes (including Op-Code)	9 (decimal)	UINT16
IP	Setting of IP	Any IP address	UINT32
PORT	Sestination port for keepalive messages	Any number 0 to 65535	UINT16

Response:

Field	Description	Value	Type
Op-Code	Message op-code	0x9F	UINT8
Length	Total message length in bytes (including Op-Code)	4 (decimal)	UINT16
Ack/Nack		0 - Acknowledge 1 – Not acknowledge	UINT8

		2 – EEPROM write protected (Setting didn't register)	

GET_CONFIG

This message is sent to the PDU to retrieve its full configuration from EEPROM

Message:

Field	Description	Value	Type
Op-Code	Message op-code	0x9A	UINT8
Length	Total message length in bytes (including Op-Code)	3 (decimal)	UINT16

Response:

Field	Description	Value	Type
Op-Code	Message op-code	0x9B	UINT8
Length	Total message length in bytes (including Op-Code)	125 (decimal)	UINT16
Ack/Nack		0 - Acknowledge 1 – Not acknowledge	UINT8
IP	IP Address	Any IP value (000.000.000.000 – 255.255.255.255)	UINT32
IpMask	Mask for the IP address	Any mask value (000.000.000.000 – 255.255.255.255)	UINT32
IpType	Static or Dynamic IP address	Possible values: 0 – Dynamic IP 1 –Static IP	UINT8
Over_Load_Limit	Maximum allowed overload for switch		UINT16[8]
Current_Limit	Maximum allowed current for switch		UINT16[8]
Thermal_Const	Thermal const values		UINT16[8]
GroupNum	Group number for a switch	Possible groups: 1-8 No group: 255	UINT8[8]
CH_POR	Array of channels order to enable. If a channel is present twice in the array, than the first appearance will govern	Possible values: 1-8 – outputs 1 to 8 129-136 – groups 1 to 8 (129 is for group 1) 0 – Array termination.	UINT8[8]
Delay_POR	Delay in milliseconds before each of the corresponding switch enable. CHAN_DELAY[i] is the delay before enable of CHAN_ON[i]	0 – 5000.	UINT16[8]
CH_DCI	Array of channels order control. The channels will be controlled by the order of the array.	Possible values: 1-8 – outputs 1 to 8	UINT8[8]

Field	Description	Value	Type
		129-136 – groups 1 to 8 (129 is for group 1) 0 – Array termination.	
CH_STATE_DCI	Control for each of the corresponding switch enable. CHAN_STATE[i] is the state control for CHANNEL[i]	Possible values: 0 – OFF 0- 1 - ON	UINT8[8]
DELAY_DCI	Delay in milliseconds before each of the corresponding switch control. CHAN_DELAY[i] is the delay before control of CHANNEL[i]	0 – 5000.	UINT16[8]

ERASE_DATA

This message is sent to the PDU to erase non-volatile data and reset to default configuration. This can only happen if the WP line is connected to DGND.

Message:

Field	Description	Value	Type
Op-Code	Message op-code	0x9C	UINT8
Length	Total message length in bytes (including Op-Code)	35 (decimal)	UINT16
CONFIRM	Confirmation string. If value is not as expected then erase will not be executed.	"ERASE EEPROM M9811-1"	CHAR[32]

Response:

Field	Description	Value	Type
Op-Code	Message op-code	0x9D	UINT8
Length	Total message length in bytes (including Op-Code)	4 (decimal)	UINT16
Ack/Nack		0 - Acknowledge 1 – Not acknowledge 2 – EEPROM write protected	UINT8

Autonomous Messages

KEEPALIVE

Keepalive message is transmitted by the PDU once every 1 seconds. It is sent as broadcast packet to UDP port 5010 and has no response message .
The structure is identical to the response to GET_STATUS message. See Paragraph 0, with Opcode 0x5A.

Factory Use Only

SET__DEBUG

Commands for factory use and calibration.

Message:

Field	Description	Value	Type
Op-Code	Message op-code	0xB0	UINT8
Length	Total message length in bytes (including Op-Code)	TBD (decimal)	UINT16
… … …	… … …	… … …	… … …

Response:

	Description	Value	Type
Op-Code	Message op-code	0xB1	UINT8
Length	Total message length in bytes (including Op-Code)	4 (decimal)	UINT16
Ack/Nack	Field	0 - Acknowledge 1 – Not acknowledge	UINT8

Software Update

GET_SOFTWARE_INFO

This message is sent to the PDU to poll the software update related information.

Message:

Field	Description	Value	Type
Op-Code	Message op-code	0xCA	UINT8
Length	Total message length in bytes (including Op-Code)	3 (decimal)	UINT16

Response:

Field	Description	Value	Type
Op-Code	Message op-code	0xCB	UINT8
Length	Total message length in bytes (including Op-Code)	82 (decimal)	UINT16
SERVER	IP address of TFTP server for software update process	Any IP address	UINT32
FILENAME	Filename for software update process.	Any file name. Null terminated string, maximum length 32 chars.	UINT8[33]
STATUS	Status indication	0x01 – Ready. 0x15 – Busy (during process). 0x1F – Update Successful. 0x29 – Update failed. 0x2A – Failed (file too large). 0x2B – Failed (general). 0x2C – Failed (verify error).	UINT8
PROGRESS	Progress (in bytes) of current (or last) software update process.	0 if no process was started since last reset. Any value (increasing) during active process. Any value (constant) when process has completed.	UINT32
ACTIVE_FILE	Filename of the currently active version.	Any file name. Null terminated string, maximum length 32 chars.	UINT8[33]

Field	Description	Value	Type
ACTIVE_SIZE	File size of currently active version.	Any file name. Null terminated string, maximum length 32 chars.	UINT32

SET_SOFTWARE_UPDATE

This message is sent to the PDU to invoke a firmware update process.

Message:

Field	Description	Value	Type
Op-Code	Message op-code	0xCC	UINT8
Length	Total message length in bytes (including Op-Code)	40 (decimal)	UINT16
SERVER	IP address of TFTP server for software update process	Any IP address	UINT32
FILENAME	Filename for software update process.	Any file name. Null terminated string, maximum length 32 chars.	UINT8[33]

Response: SW_UPDATE ACK

Message:

Field	Description	Value	Type
Op-Code	Message op-code	0xCD	UINT8
Length	Total message length in bytes (including Op-Code)	4 (decimal)	UINT16
Ack/Nack	IP address of TFTP server for software update process	0 – Ack 1 – Nack (if PDU is already within update process)	UINT8

DIMENSIONS

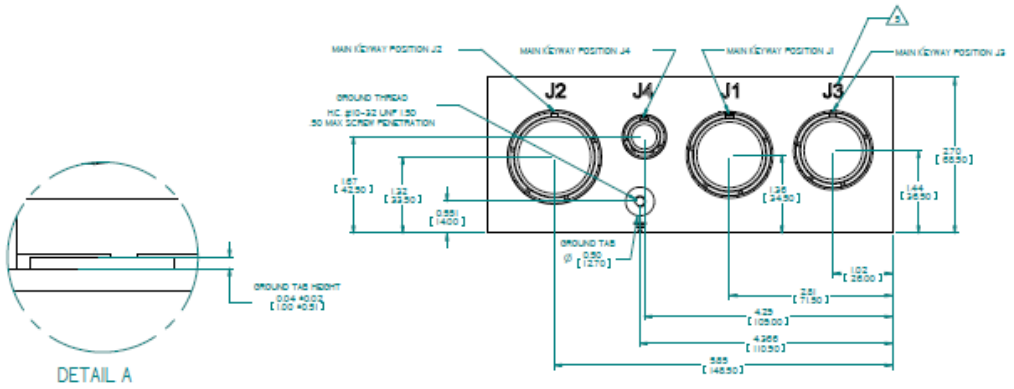

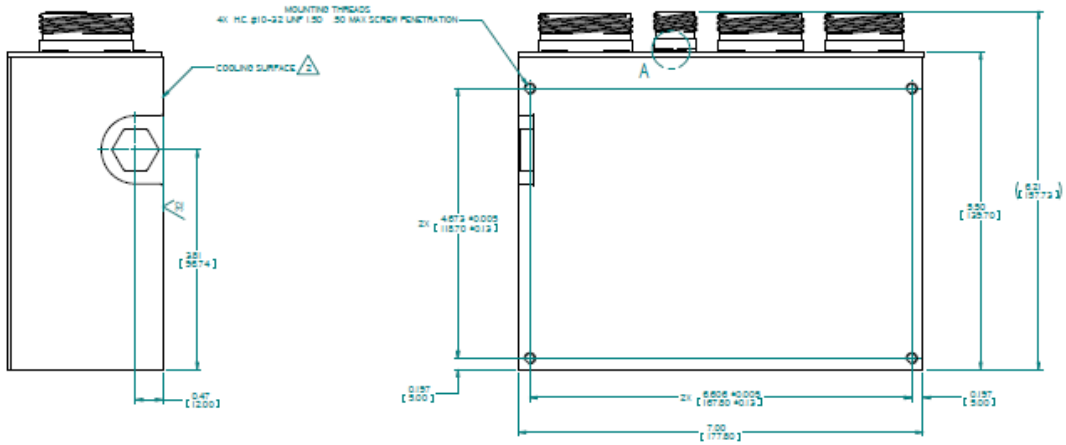

NOTES:

1. CONNECTORS:
   J1 - POWER IN - DTS20W23-24320PN-004 OR EQ.
   J2 - POWER OUT - D38999/20WJ11SN OR EQ.
   J3 - POWER OUT - D38999/20WG11SN OR EQ.
   J4 - CONTROL - D38999/20WB35SN OR EQ.
2. HEAT DISSIPATION AREA - 33.7 in^2
3. MTL. AL 6061-T651& AL 5052-H32
4. CONVERSION COATING PER MIL -C-5541 ,TYPE 1 ,CLASS 1A
5. ENGRAVING
   LINE AND CHARACTER DEPTH : .02 INCH
   CHARACTER ARE CENTRALLY LOCATED,
   CHARACTER HEIGHT : .25 INCH
   FILL ENGRAVING WITH BLACK LUSTERLESS
   EPOXY PAINT COLOR PER FED-STD 595 NO : 37038.

Note: Specifications are subject to change without prior notice by the manufacturer