M2701 SERIES

3-PHASE AC/DC POWER SUPPLY

PRODUCT HIGHLIGHTS

- **3-PHASE AC/DC POWER SUPPLY**
- **HIGH EFFICIENCY**
- **HIGH VOLTAGE**
- **SINGLE OUTPUT**
- **UP TO 500 W**

Applications

Military (ground-fix, shipboard), Ruggedized, Telecom, Industrial

Special Features

- Miniature size
- High efficiency
- Wide input range
- Input / Output Isolation
- Inrush Current Limiter
- Fixed switching freq. (250 kHz)
- External Inhibit
- EMI filters included
- Non-latching automatic recovery protections:
  - Short-circuit
  - Over-temperature

Electrical Specifications

AC Input

115 $V_{RMS, L-N}$ ± 10%, 400 Hz 3-Phase

Efficiency

Typically: 90%
($270V_{DC}$ output, full load, nominal input voltage, room temperature)

Isolation

Input to Output: 500 V_{DC}

Input to Case: 500 V_{DC}
Output to Case: 500 V_{DC}

Transient over-and-undershoot Output resistance at load change of 50% to 100% is 1.5 Ω, typical.

DC Output

Voltage range: 100 to 320 V_{DC}
Current range: 0 to 5 A
Power range: 0 to 500 W

Output voltage regulation

Less than ±1%
(No load to full load, –55°C to +85°C and over normal input voltage range).

Abnormal surge (no damage)

IAW MIL-STD-704A-F:
0 V to 180V

Ripple & Noise

Less than $100mV_{p-p}$, typical (max.
1%) without external capacitance. When connected to the system
capacitance ripple drops significantly.

EMC*

Designed to meet MIL-STD-461F:
CE102, CS101, CS114, CS115, CS116, RE102, RS101, RS103.

*Depending on configuration, an external filter may be required to comply with EMI requirements.

Protections *

Input

- **Inrush Current Limiter** Peak value of 5x I_{IN} for inrush current lasting over 50µsec.

Output

- **Passive Over-Voltage Protection** Transorb assembled across the output pins, selected at 120% ± 10% of nominal voltage.
- **Current Limiting** Continuous protection (10-30% above maximum current) for unlimited time (Hiccup).

General

- **Over Temperature Protection** Unit shuts down if baseplate temperature rises above +105°C ± 5°C.

  Automatic recovery when baseplate temperature falls below +95°C ± 5°C.

Environmental Conditions

Designed to meet MIL-STD-810G

Temperature
Operating: –55 °C to +85 °C (at baseplate)
Storage:–55 °C to +125°C

Altitude
Method 500.4
Procedures I & II – Up to 33 kft.
Higher altitude option.

Salt Fog
Method 509.4

Humidity
Method 507.4
Procedure I

Up to 95% RH

Vibration (random)
Method 514.5
Category 4 - General minimum
integrity exposure
IAW Figure 514.5C-17
1 hour per axis.

Shock
Method 516.5
Procedure I

20 g, 11 ms terminal peak saw-tooth,

Reliability

150 000 hours, calculated IAW MIL-HDBK-217F Notice 2 at +85 °C baseplate, Ground Fixed environment.

Notes:

* Thresholds and protections can be modified / removed – please consult factory.

Pin Assignment †

J1 - Input Connector

Type: M24308/24-38F or eq.
Mates with: M24308/2-2F or eq.

Pin No.	Function	
1	PHASE A	
2	N.C.	
3	PHASE B	
4	N.C.	
5	PHASE C	

Pin No.	Function	
6	N.C.	
7	N.C.	
8	CHASSIS	
9	PHASE A	
10	N.C.	

Pin No.	Function	
11	PHASE B	
12	N.C.	
13	PHASE C	
14	N.C.	
15	N.C.	

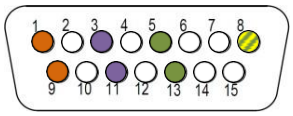

J2 - Output Connector

Type: M24308/23-38F or eq.
Mates with: M24308/4-2F or eq.

Pin No.	Function	
1	BIT	
2	N.C.	
3	INHBIT	
4	OUT	
5	OUT	

Pin No.	Function	
6	N.C.	
7	OUT RTN	
8	OUT RTN	
9	BIT RTN	
10	N.C.	

Pin No.	Function	
11	OUT	
12	OUT	
13	N.C.	
14	OUT RTN	
15	OUT RTN	

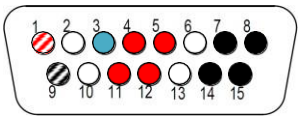

† All pins with identical function/designation should be connected for best performance

Functions and Signals

INHIBIT (connector J2, pin 3)
The INHIBIT signal is used to turn the power supply ON and OFF. "1" or OPEN – Power supply active (output turned on).
"0" or SHORT to OUT RTN – Power supply inhibited (output turned off). If this function is not required, leave this pin unconnected.

BIT (connector J2, pin 1)
The **BIT** signal indicates the status of the output voltage.
When output voltage rises above 90% ± 5% of its nominal value, pin 1 will be pulled down to pin 9 through a 20 Ω ± 1% resistor and a phototransistor.
When output voltage falls below 90% ± 5% of its nominal value, pin 1 will be in high impedance mode. If not used, leave this pin open.
This signal is referenced to **BIT RTN** pin **(connector J2, pin 9)**
Absolute maximum voltage between BIT and BIT RTN: 52 V_{DC}
Absolute maximum current into BIT pin: 2 mA (connect external voltage to this pin via an external resistor) Both pins 1 and 9 are isolated from all other parts of the circuitry.

CHASSIS (connector J1, pin 8)
The CHASSIS pin allows additional connection of unit's chassis to the system ground.

Typical Connection Diagram

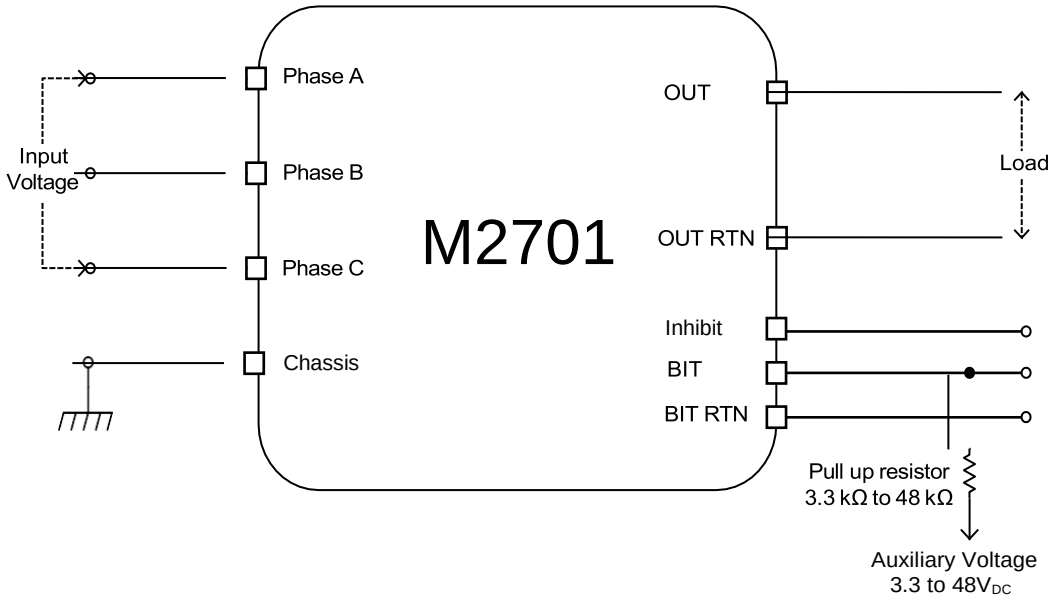

Outline Drawing

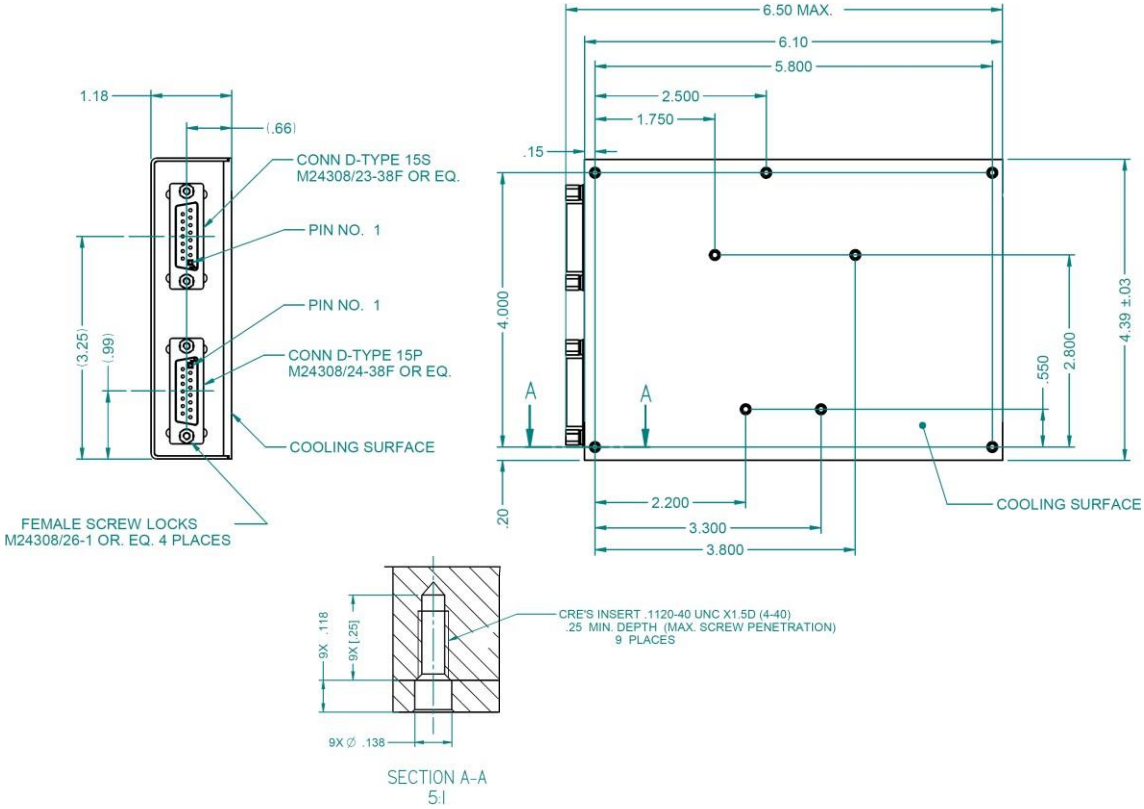

Notes

1. Dimensions are in inches [mm]
2. Tolerance is:
   .XX ± 0.02 in
   .XXX ± 0.010 in
3. Weight: approx. 900 gr

Note: Specifications are subject to change without prior notice by the manufacturer