VM

VM2/A0-1B

Ind.M12,2 wires AC-NO,Cable,Sch-STD

CYLINDRICAL M12 IN AC INDUCTIVE SENSORS

OVERVIEW

- Output: cable and M12 plug cable exit
- Models with 2 wires
- IP67 protection degree
- Multivoltage 20 ...253 Vac

TECHNICAL FEATURES

Detection properties

Nominal sensing distance	2mm
Operanting distance	0…1,62mm
Standard target	12x12mm FE360
Correction Factor	copper: 0,40 / aluminium: 0,50 / brass: 0,55 / stainless steel: 0,75
Thermal drift of Sr	< 10%
Repeat Accuracy	< 5% (UB 24V Ta=23°C ±5°C)

Hysteresis	1 … 20%

Application

Description	M12 standard flush mount
Functions	Proximity

Outputs

Output type	TRIAC
Output Function	NO
Switching frequency	25Hz

Electrical data

Operating Voltage	20...250Vac/50...60Hz
Load current	5...300mA
Leakage current	≤ 1mA RMS max
Output voltage drop	See curves
Max ripple content	≤ 10%
LED indicators	Yellow LED output state
Time delay before availability	≤ 200ms
Inrush current	7A (Ton = 10ms)

Mechanical data

Dimensions	M12 x 1 / L = 71,5mm
Mounting	Shielded
Material	Nickel-plated brass
Housing material	Nickel-plated brass
Weight	100g
Connections	2m PVC cable with tang
Active Head Material	PBT
Tightening torque	10Nm
Operating temperature	-25°C…+70°C
Diameter/Dimension	M12

Test/Approvals

Approvals	CE UR
EMC compatibility	IEC 60947-5-2
Shocks and vibrations	Vibration IEC 60068-2-6 / Shock IEC 60068-2-27
Degree of protection	IP67

Accessories

Supplied Accessories	2 nuts M12x1

Generical Data

Dimensions	M12 x 1 / L = 71,5mm

Operating Temperature	-25°C…+70°C
Mechanical Protection	IP67

CONNECTIONS

Eletrical diagram

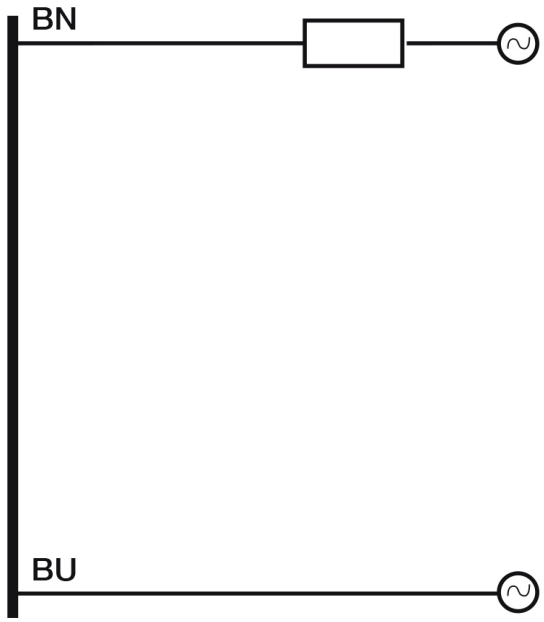

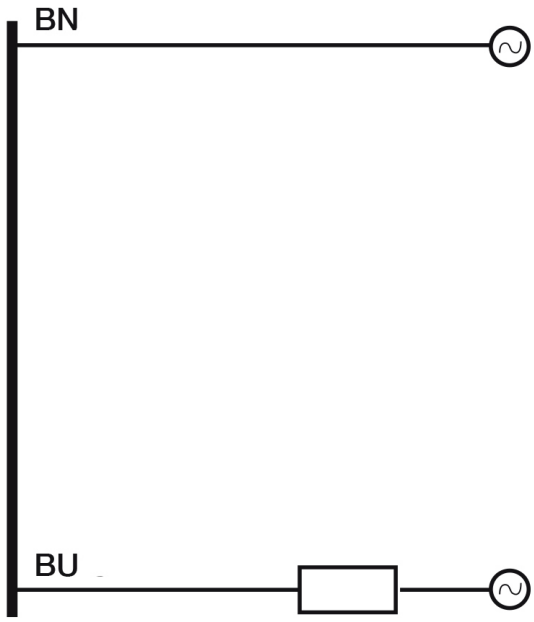

OTHERS

Dimensions

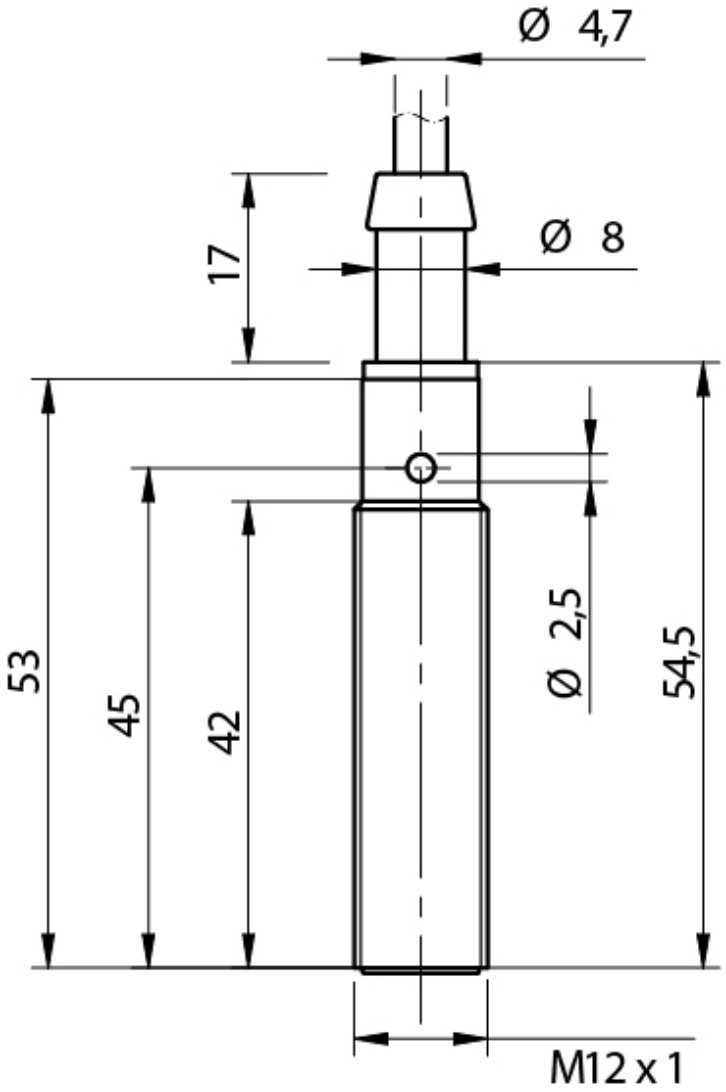

Response curves

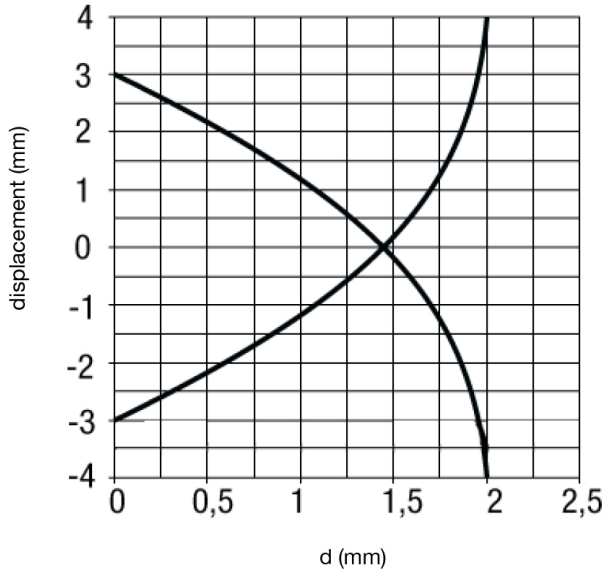

Installation

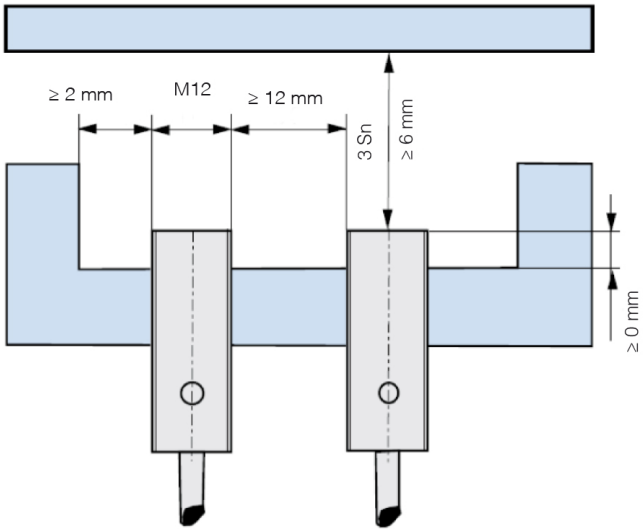

Datasensing S.r.l.
Strada S.Caterina, 235
41122 Modena (MO)
Tel. 059 420411
Fax 059 253973
E-mail
info@datasensing.com

date of printing
05/10/2026
09:32:33